V1.1 2009. 12.31

RemoDAQ-8336 Module User's Manual

Beijing Gemotech Intelligent Technology Co.，Ltd

Contents

Contents..... 2
Chapter 1 General Introduction..... 3
1.1Pin Assignment 3
1.2 Specification..... 3
1.3 Wiring Instruction 4
Chapter 2 Command..... 5
2.1 Command Structure 5
2.2 Modbus Function Code Introductions 6
2.3 RemoDAQ-8317 MODBUS RTU Address Image Table 11
2.4AI Type Setting (TT).....11
Chapter3. Software Instruction..... 12

Chapter 1 General Introduction

RemoDAQ-8300 Ethernet-based data acquisition and control modules provide I/O, data acquisitions, and networking in one module to build a cost effective, distributed monitoring and control solution for a wide variety of applications. Through standard Ethernet networking, RemoDAQ-8300 retrieves I/O values from sensors, and can publish them as a real-time I/O values to networking nodes via LAN, Intranet, or Internet. With Ethernet-enabled technology, RemoDAQ-8300 series modules build up a cost-effective DA&C system for Building Automation, Environmental Monitoring, and Facility Management and Manufacturing applications.

The RemoDAQ-8336 is a 16-bit, 6-channel RTD input and 6-channel digital input module that provides programmable input ranges on all channels. It accepts various RTD inputs (PT100, PT1000, Balco 500 & Ni) and provides data to the host computer in engineering units (°C).

1.1Pin Assignment

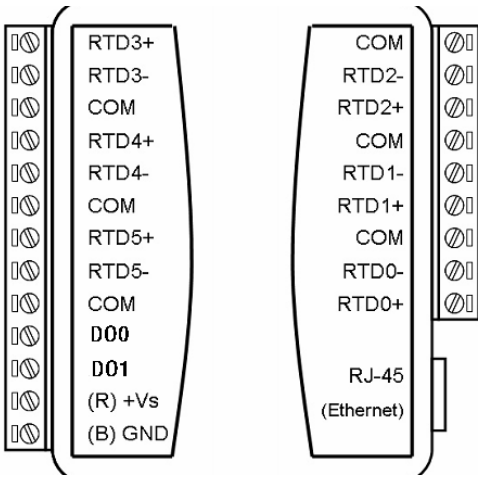

Figure 1.1

1.2 Specification

Support 10/100M Ethernet
Support Modbus/TCP
Input Voltage：+10V~+30VDC
Power Consumption：1.2W
Temperature：0℃~60℃

Temperature：5%~90%，Non condensing

AI
Channels：8
Input Type：
Pt100 a=0.00385 -100℃- +100℃
Pt100 a=0.00385 0℃- +100℃
Pt100 a=0.00385 0℃- +200℃
Pt100 a=0.00385 0℃- +600℃
Pt100 a=0.003916 -100℃- +100℃
Pt100 a=0.003916 0℃- +100℃
Pt100 a=0.003916 0℃- +200℃
Pt100 a=0.003916 0℃- +600℃
Cu100 -50℃- +150℃
Cu50 -50℃- +150℃
BA1 -200℃- +650℃
BA2 -200℃- +650℃
G53 -50℃- +150℃
Sampling Rate：10hz
Accuracy：±0.1%
Zero Drift：0.5uV/℃
Temperature Drift：1.0uV/℃
Isolation：3000VDC

DO
Channels：2
Output Type：Open Collector，MAX 30VDC 100mA

1.3 Wiring Instruction

RTD Input Wiring

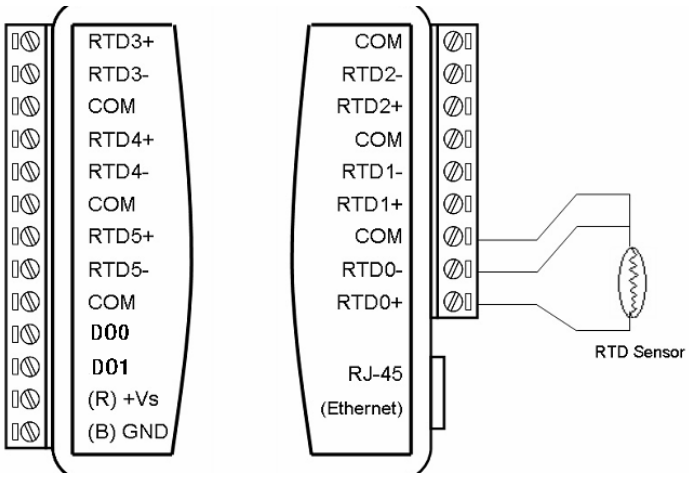

Figure 1.2

DO Wiring Instruction

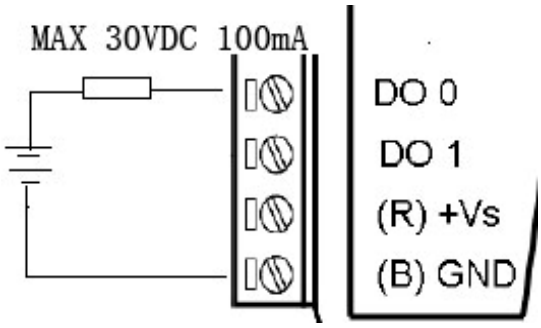

Figure 1.3

Chapter 2 Command

RemoDAQ-8300 systems accept a command/response form from the host computer. When systems are not transmitting or they are in listen mode. The host computer issues a command to the system with a specified address and waits a certain amount of time for the system to respond. If no response arrives, a time-out aborts the sequence and returns control to the host. This chapter explains the structure of the commands with Modbus/TCP protocol.

2.1 Command Structure

It is important to understand the encapsulation of a Modbus request or response carried on the Modbus/TCP network. A complete command consist of command head and command body. The command head is prefixed by six bytes and responds to pack Modbus format; the command body defines target device and requested action. Following example will help you to realize this structure quickly.

Example:

If you want to read the first two values of RemoDAQ-8336 (address: 40001~40002), the request command should be:

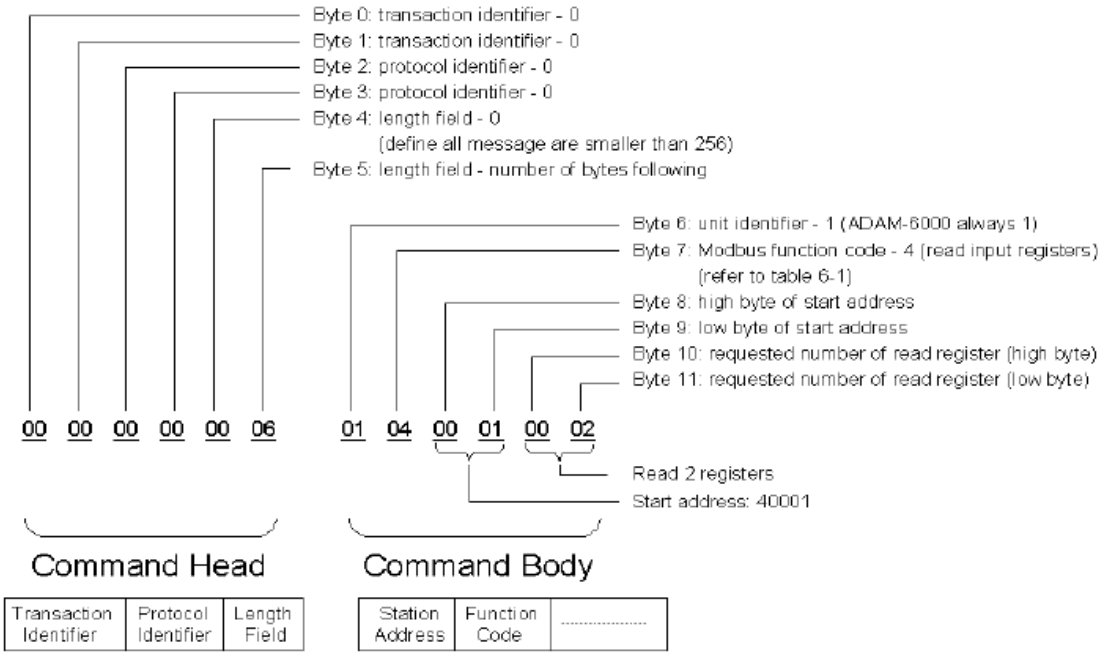

Figure2.1 Request Comment Structure

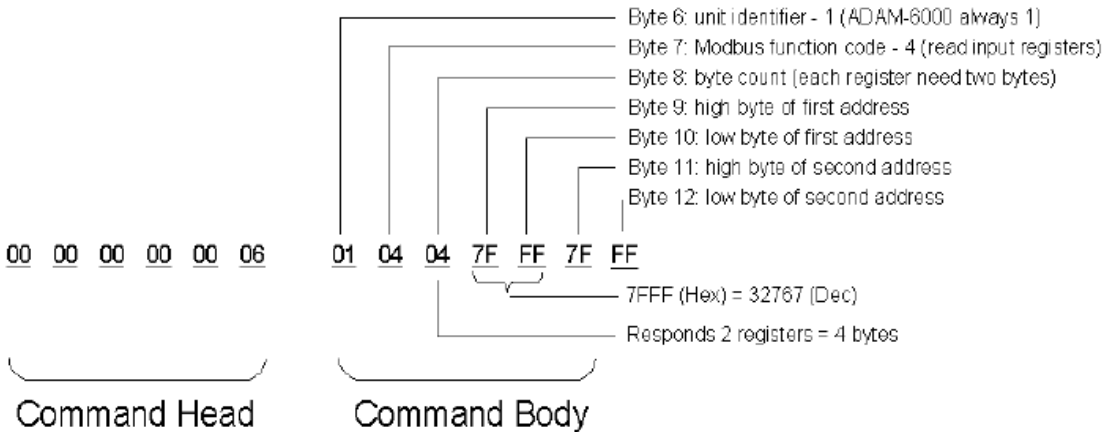

Figure2.2 Response Comment Structure

2.2 Modbus Function Code Introductions

To full-fill the programming requirement, there is a series of function code standards for user's reference…

Function Code 01

The function code 01 is used to read the discrete output's ON/OFF status of RemoDAQ-8300 modules in a binary data format.

Request message format for function code 01:

Command Body					
Station	Function	Start	Start	Requested	Requested

Address	Code	Address High Byte	address Low Byte	Number of Coil High Byte	Number of Coil Low Byte

Example: Read coil number 1 to 8 (address number 00017 to 00024) from RemoDAQ-8300 Modules

01 01 00 10 00 08

Response message format for function code 01:

Command Body					
Station Address	Function Code	Byte Count	Data	Data	…

Example: Coils number 2 and 7 are on, all others are off.

01 01 01 42

In the response the status of coils 1 to 8 is shown as the byte value 42 hex, equal to 0100 0010 binary.

Function Code 02

The function code 02 is used to read the discrete input's ON/OFF status of RemoDAQ-8300 in a binary data format.

Request message format for function code 02:

Command Body					
Station Address	Function Code	Start Address High Byte	Start address Low Byte	Requested Number of Coil High Byte	Requested Number of Coil Low Byte

Example: Read coil number 1 to 8 (address number 00001 to 00008) from RemoDAQ-8300 modules

01 01 00 01 00 08

Response message format for function code 01:

Command Body					
Station Address	Function Code	Byte Count	Data	Data	…

Example: input number 2 and 3 are on, all others are off.

01 01 01 60

In the response the status of input 1 to 8 is shown as the byte value 60 hex, equal to 0110 0000 binary.

Function Code 03/04

The function code 03 or 04 is used to read the binary contents of input registers.

Request message format for function code 03 or 04:

Command Body					
Station Address	Function Code	Start Address High Byte	Start address Low Byte	Requested Number of Register High Byte	Requested Number of Register Low Byte

Example: Read register 40002 to 40003 hex in RemoDAQ-8300 module

01 04 00 01 00 02

Response message format for function code 03 or 04:

Command Body					
Station Address	Function Code	Byte Count	Data	Data	…

Example: Values where register 40002= 0043H and register 40003= 21H

01 04 04 00 43 00 21

Function Code 05

Force a single coil to either ON or OFF. The requested ON/OFF state is specified by a constant in the query data field. A value of FF 00 hex requests it to be ON. A value of 00 00 hex requests it to be OFF. And a value of FF FF hex requests it to release the force.

Request message format for function code 05:

Command Body					
Station Address	Function Code	Coil Address High Byte	Coil address Low Byte	Force Data High Byte	Force Data Low Byte

Example: Force coil 3 (address 00003) ON in RemoDAQ-8300 module

01 05 00 03 FF 00

Response message format for function code 05:

The normal response is an echo of the query, returned after the coil state has been forced.

Command Body					
Station Address	Function Code	Coil Address High Byte	Coil address Low Byte	Force Data High Byte	Force Data Low Byte

Function Code 06

Preset integer value into a single register.

Request message format for function code 06:

Command Body					
Station Address	Function Code	Register Address High Byte	Register address Low Byte	Preset Data High Byte	Preset Data Low Byte

Example: Preset register 40002 to 00 04 hex in RemoDAQ-8300 module

01 06 00 02 00 04

Response message format for function code 06:

The normal response is an echo of the query, returned after the coil state has been preset.

Function Code 15 (0F hex)

Forces each coil in a sequence of coils to either ON or OFF.

Request message format for function code 15:

Command Body								
Station Address	Function Code	Start Address High Byte	Start Address Low Byte	Requested Number of Coil High Byte	Requested Number of Coil Low Byte	Byte Count	Force Data High Byte	Force Data Low Byte

Example: Request to force a series of 10 coils starting at address 00017 (11 hex) in RemoDAQ-8300 module.

01 0F 00 11 00 0A 02 CD 01

The query data contents are two bytes: CD 01 hex, equal to 1100 1101 0000 0001 binary. The binary bits are mapped to the addresses in the following way.

Bit: 1 1 0 0 1 1 0 1 0 0 0 0 0 0 0 1

Address (000XX): 24 23 22 21 20 19 18 17 - - - - - - 26 25

Response message format for function code 15:

The normal responses return the station address, function code, start address, and requested number of coil forced.

Command Body					
Station Address	Function Code	Start Address High Byte	Start Address Low Byte	Requested Number of Coil High	Requested Number of Coil Low

				Byte	Byte

Example: 01 0F 00 11 00 0A

Function Code 16 (10 hex)

Preset values into a sequence of holding registers.

Request message format for function code 16:

Command Body							
Station Address	Function Code	Start Address High Byte	Start Address Low Byte	Requested Number of Register High Byte	Requested Number of Register Low Byte	Byte Count	Data

Example: Preset Address 40001 to 1234H and address 40002 to 5678H in RemoDAQ-8300 module.

01 10 00 00 00 02 04 12 34 56 78

Response message format for function code 08:

The normal responses return the station address, the function code, start address, and requested number of registers preset.

Command Body					
Station Address	Function Code	Start Address High Byte	Start Address Low Byte	Requested Number of Register High Byte	Requested Number of Register Low Byte

Example: 01 10 00 00 00 02

2.3 RemoDAQ-8336 MODBUS RTU Address Image Table

address 4X(Decimal)	Hex	Channel number	Content	attribute	Description	address 0X(Decimal)
40001	0H	0	current value	read	04	0000H~FFFFH Corresponding engineering range
40002	1H	1	current value	read	04	
……	…..					
40006	6H	6	current value	read	04	
40201	C8H		Signal type	read/write	04/06	
40211	D2H		Name	read	04	83H，36H
40213	D4H		Version 1	read	04	A1H，00H

2.4AI Type Setting (TT)

Type Code	RTD Type	Tem Range
20	Pt100 a=0.00385	-100℃- +100℃
21	Pt100 a=0.00385	0℃- +100℃
22	Pt100 a=0.00385	0℃- +200℃
23	Pt100 a=0.00385	0℃- +600℃
24	Pt100 a=0.003916	-100℃- +100℃
25	Pt100 a=0.003916	0℃- +100℃
26	Pt100 a=0.003916	0℃- +200℃
27	Pt100 a=0.003916	0℃- +600℃
2B	Cu100	-50℃- +150℃
2C	Cu50	-50℃- +150℃
2D	BA1	-200℃- +650℃

2E	BA2	-200℃- +650℃
2F	G53	-50℃- +150℃

Chapter3. Software Instruction

1、Click RemoDAQ-8300 Series Ethernet IO Module Utility.exe installation tool software.

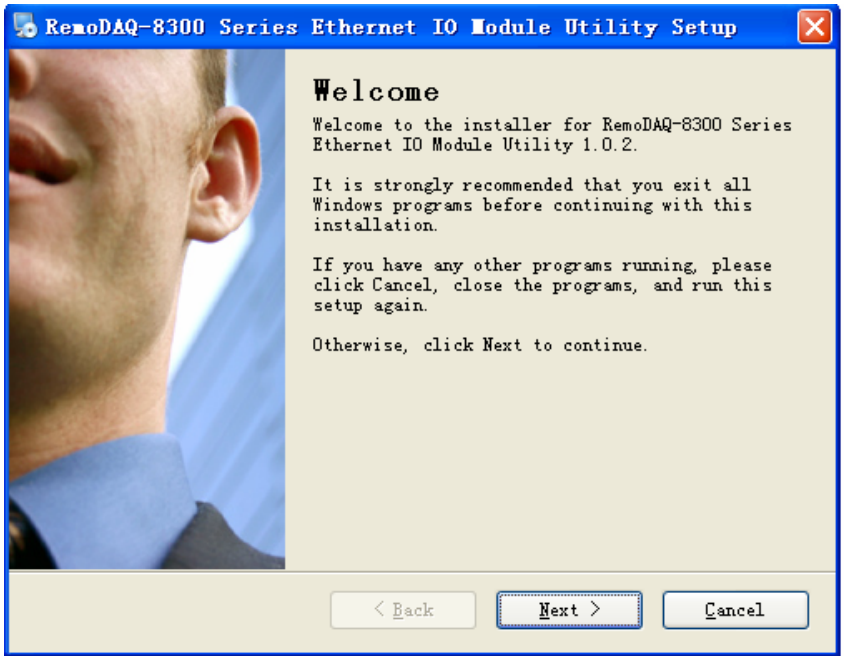

Figure 3.1

2、Click Next, install according to instruction.

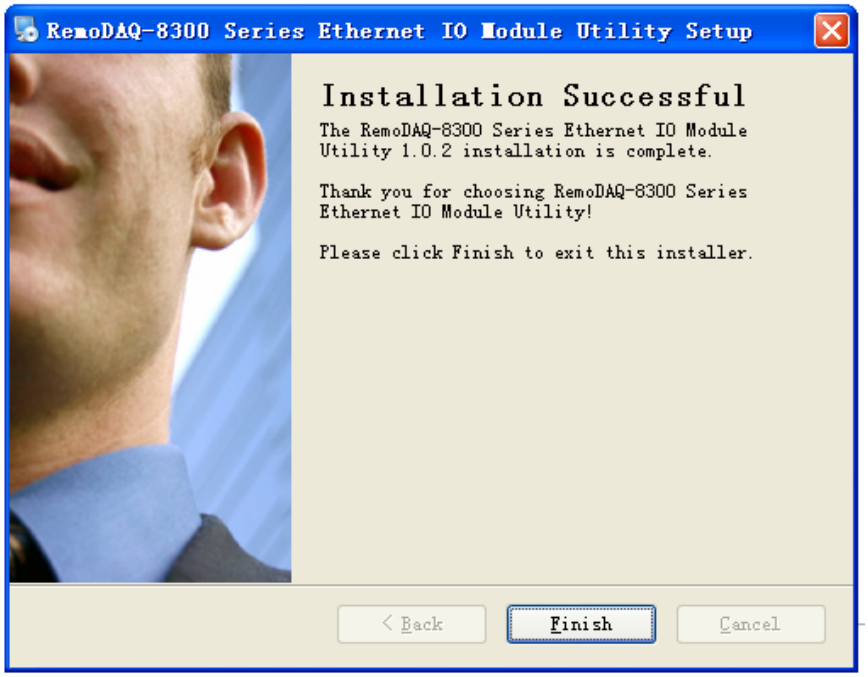

Figure 3.2

3、Click Finish, installation ends.

4、Generate shortcut icon on the desktop

Figure 3.3

5、Click the icon to enter the interface.

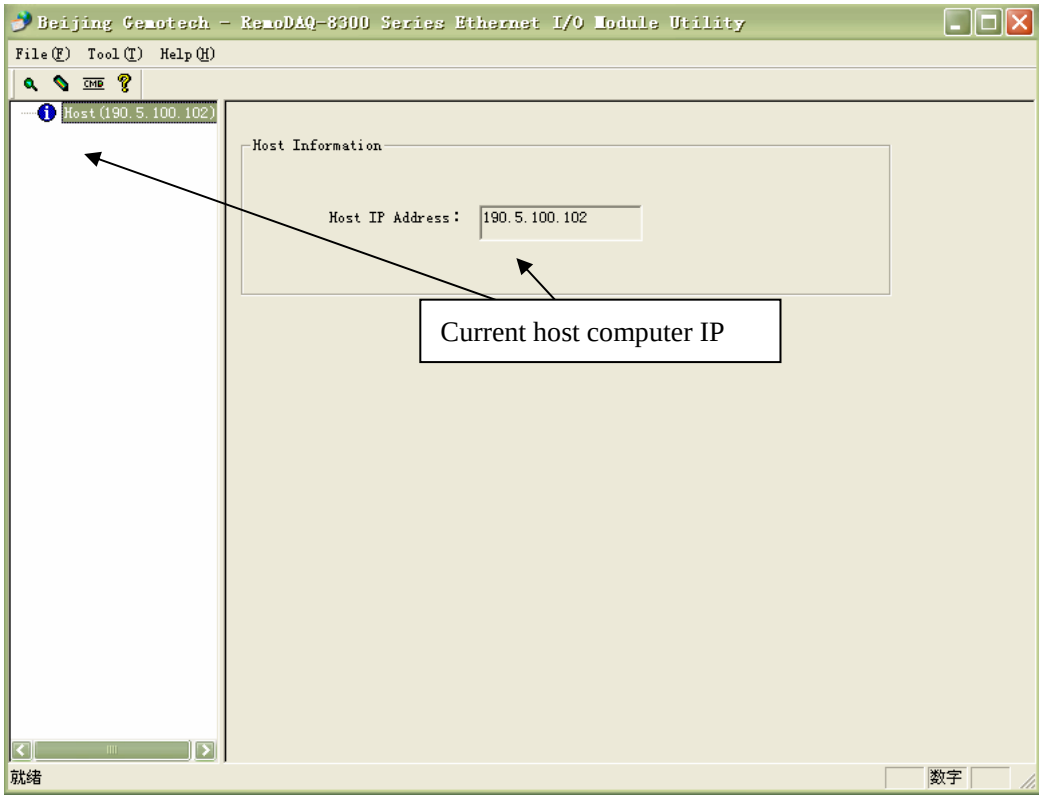

Figure 3.4

6、Click the magnifying glass icon, RemoDAQ-8300 Series Ethernet IO Module Utility will then search all RemoDAQ-8300 modules on the Ethernet network. If your RemoDAQ-8300 modules are used for the first time, its IP will be 192.168.0.1 by default.

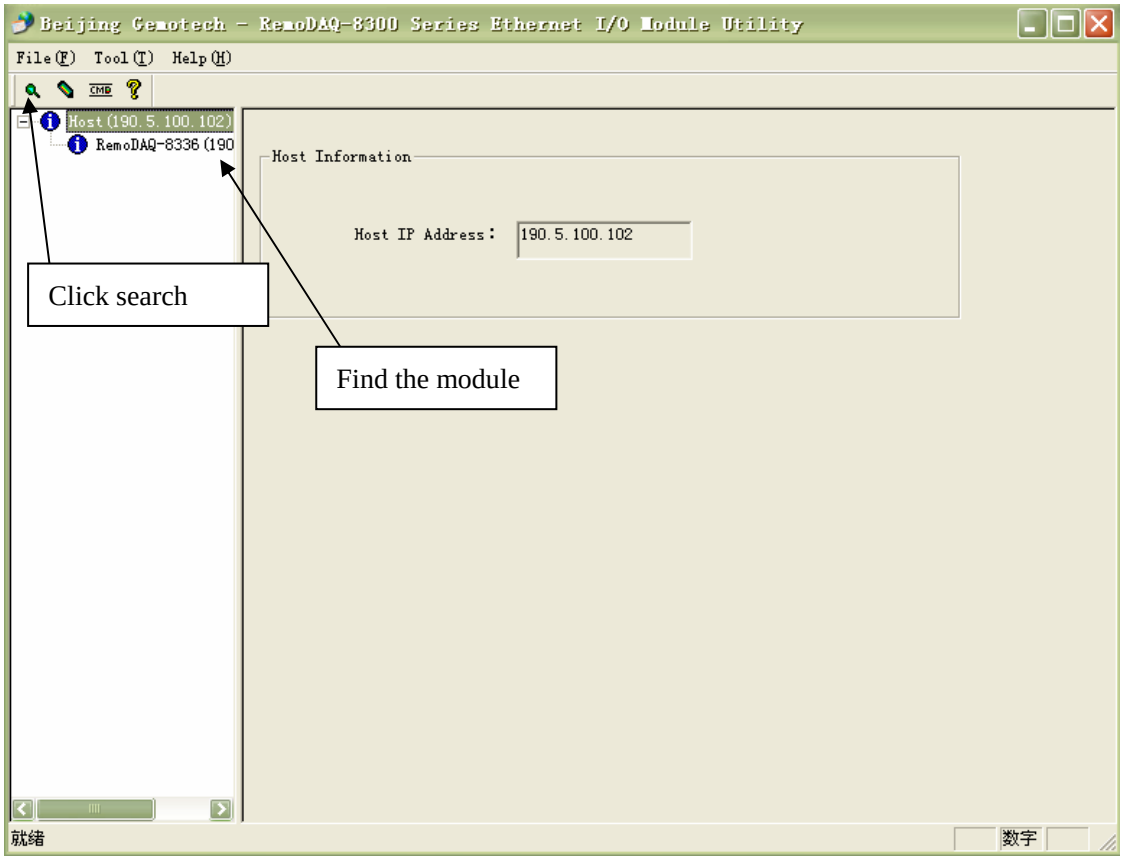

Figure 3.5

7、Click RemoDAQ-8336。

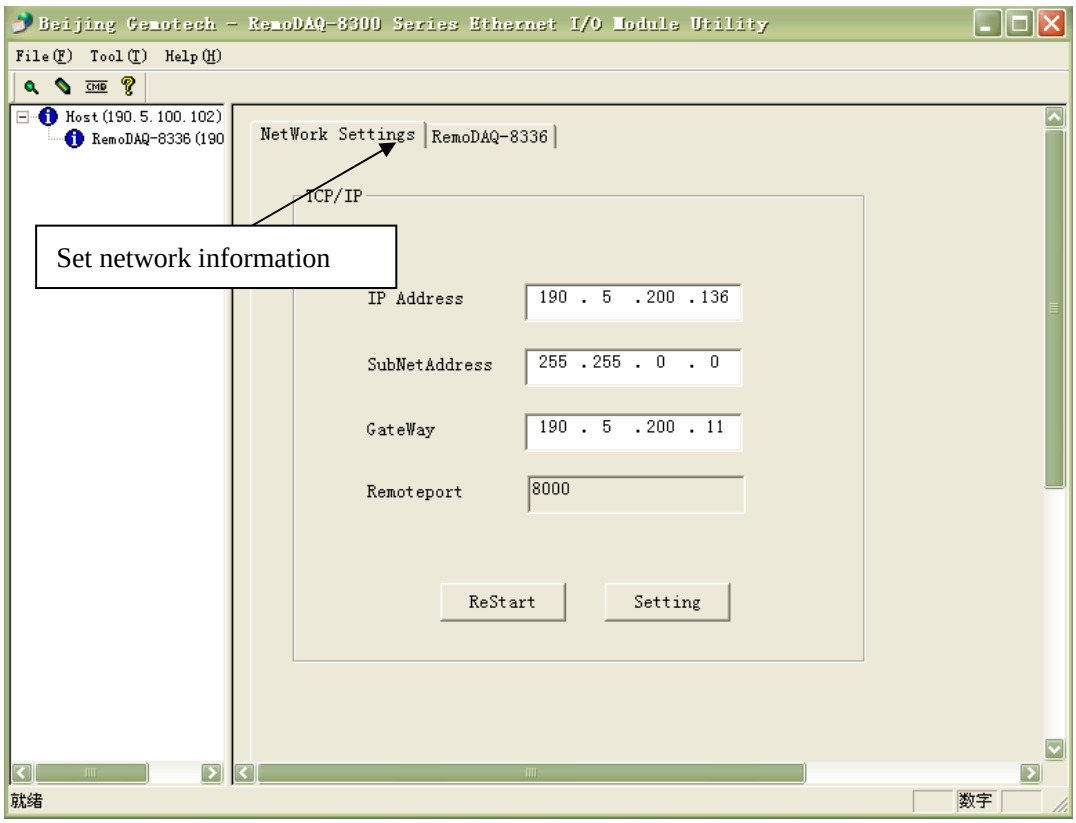

Figure 3.6

8、You need to change IP of the RemoDAQ-8300 modules the same subnet with the host PC. Type the correct **IP address**, **Subnet address**, and **Gateway** on the Status Display area. After complete setting, click the **Setting** button. When you finish the Network Settings, please click the **ReStart** Button to restart the module. After that, you must search for the module again. The port of RemoDAQ-8300 modules are 8000.

9、Click “RemoDAQ-8336” shown in Figure to enter function application interface.。

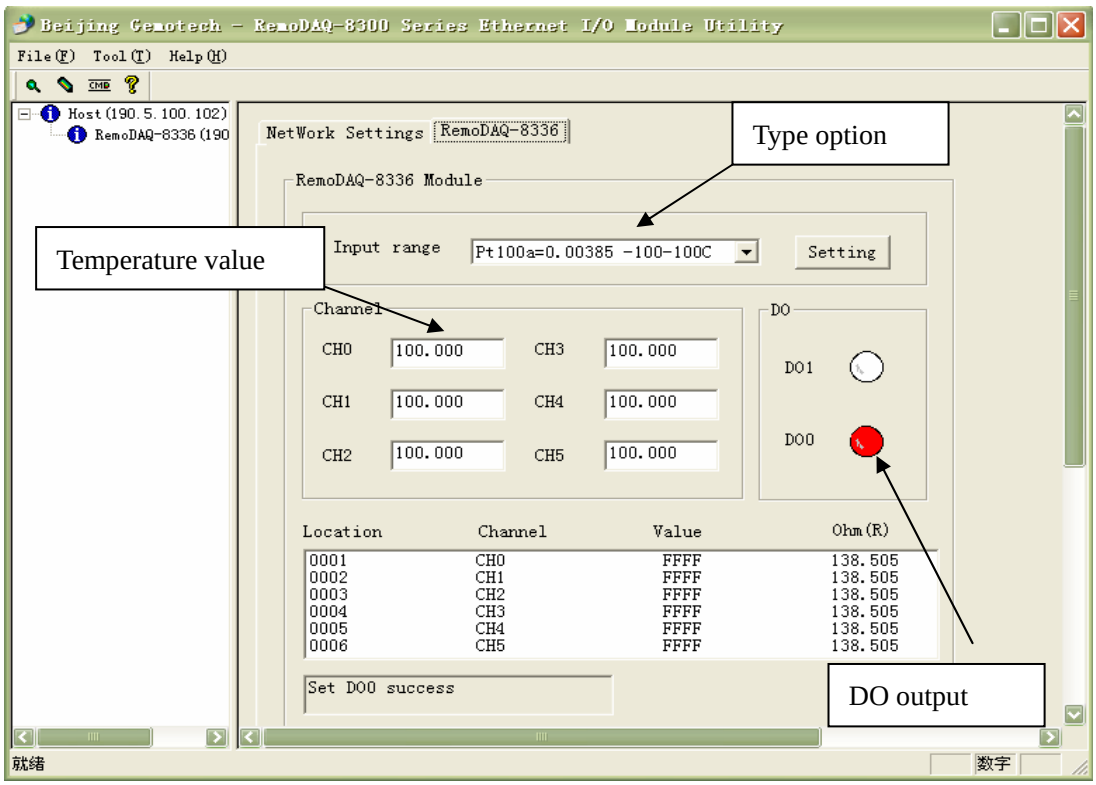

Figure 3.7

You can read RTD value or configure setting for all channels on the **RemoDAQ-8336** area. In the **Range** area, select the range in the **Input range** combo box. After selecting appropriate range, click the **Setting** button. In the **Channel** area, you can see the current value of RTD. You can see and set the value of digital output in the **DO** area.