V1.0 2010.03.01

RemoDAQ-8324 Module
User's Manual

Beijing Gemotech Intelligent Technology Co.，Ltd

Contents

Chapter 1 Introduction 3
1.1General Introduction 3
1.2 Pin Assignment 3
1.3 Features 4
1.3.1 General Introduction 4
1.3.2 Analog Output 4
1.3.3 Digital input 4
1.3.4 Digital Output 4
1.4 Wiring Instruction 5
1.4.1Voltage Output Wiring Instruction 5
1.4.2 Current Output Wiring Instruction 5
1.4.3 Digital Input Wiring Instruction 6
1.4.4 Digital Output Wiring Instruction 7
1.5 Setting Table 7
Chapter 2 Command Data Format 8
2.1 Command Structure 8
2.2 Modbus Function Code Introductions 9
2.3 RemoDAQ-8324 MODBUS RTU Address Image Table 13
Chapter 3 Software Instruction 16
Chapter 4 Application Annotation 21
4.1Module Status 21
4.2 watchdog operation 21
4.3 Analog Output 21
4.4 Current Output Value Readback. 22

Chapter 1 Introduction

1.1General Introduction

RemoDAQ-8300 Ethernet-based data acquisition and control modules provide I/O, data acquisitions, and networking in one module to build a cost effective, distributed monitoring and control solution for a wide variety of applications. Through standard Ethernet networking, RemoDAQ-8300 retrieves I/O values from sensors, and can publish them as a real-time I/O values to networking nodes via LAN, Intranet, or Internet. With Ethernet-enabled technology, RemoDAQ-8300 series modules build up a cost-effective DA&C system for Building Automation, Environmental Monitoring, and Facility Management and Manufacturing applications.

The RemoDAQ-8324 is a 12-channel Universal Input/Output module. There are 4 analog output, 4 digital input and 4 digital output channels.

1.2 Pin Assignment

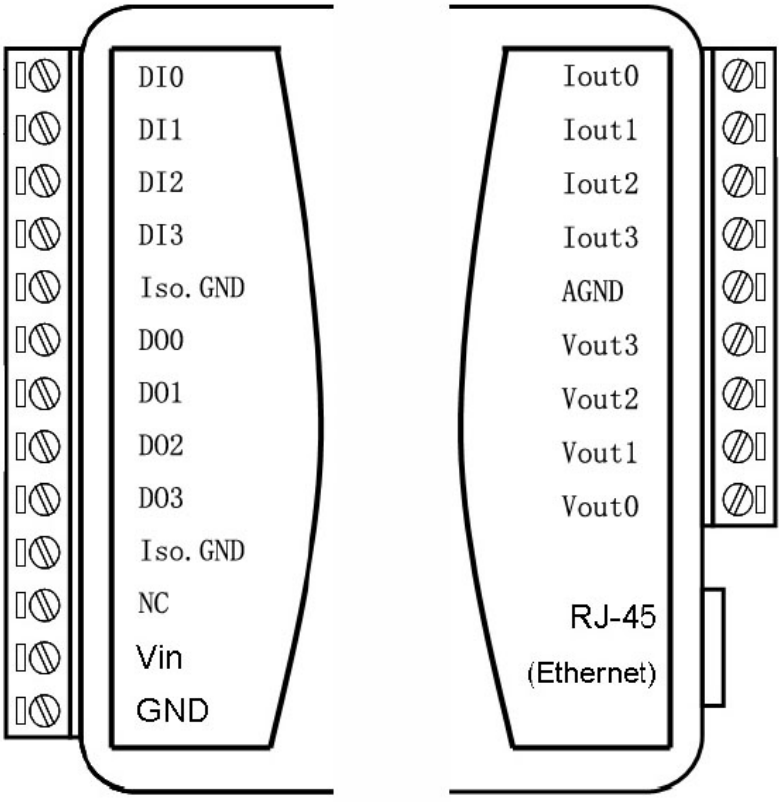

Figure1.1

1.3 Features

1.3.1 General Introduction

- Support 10/100M Ethernet
- Support Modbus/TCP
- Input Voltage：+10V~+30VDC
- Power Consumption：1.9W
- Temperature：-20℃~70℃
- Humidity：5%~90%，Non condensing
- Isolation：3000VDC

1.3.2 Analog Output

- Channel：4
- Input Type：mA，V
- Accuracy：±0.1% FSR
- Resolution：12 位
- Zero Drift：Voltage Output ±30uV/℃
  Current Output ±0.2uA/℃
- Voltage Output：Max 10V
- Current Load Impedance：External 24V：1050 ohms

1.3.3 Digital input

- Channel：4
- Dry Contact：
  - Logic Level 0：Ground
  - Logic Level 1：Open
- Wet Contact：
  - Logic Level 0：0 ~ 3 VDC
  - Logic Level 1：10 ~ 30 VDC

1.3.4 Digital Output

- Channel： 4
- Output Type：open collector， sink mode，MAX 30VDC 100mA

1.4 Wiring Instruction

1.4.1Voltage Output Wiring Instruction

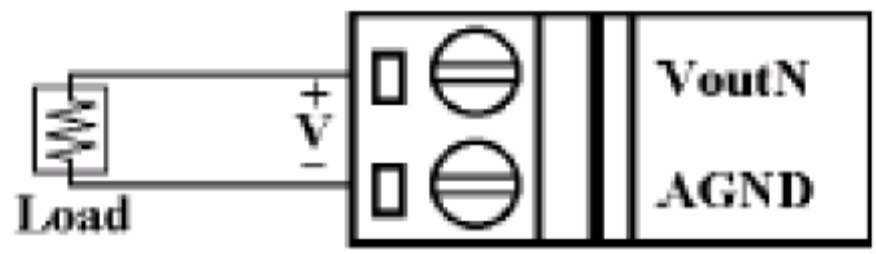

Figure1.2 Voltage Output Wiring Instruction

1.4.2 Current Output Wiring Instruction

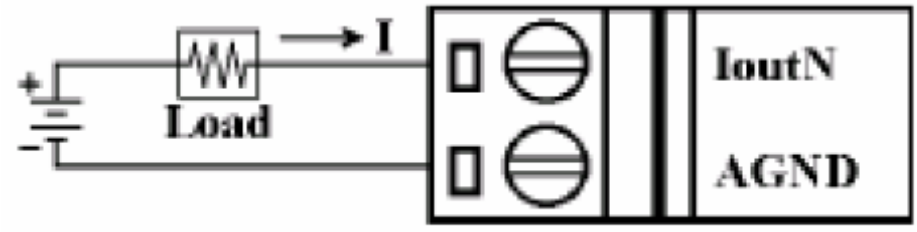

Figure1.3 Current Output Wiring Instruction

1.4.3 Digital Input Wiring Instruction

Dry Contact

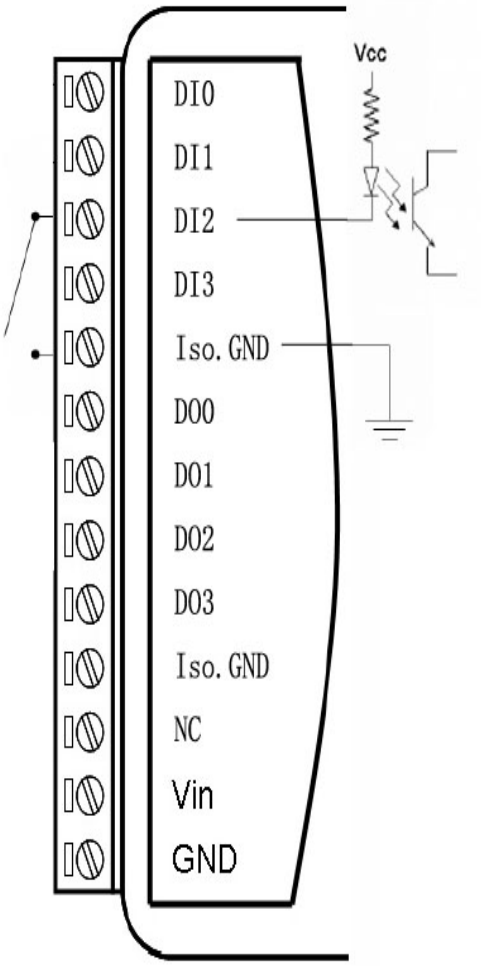

Wet Contact

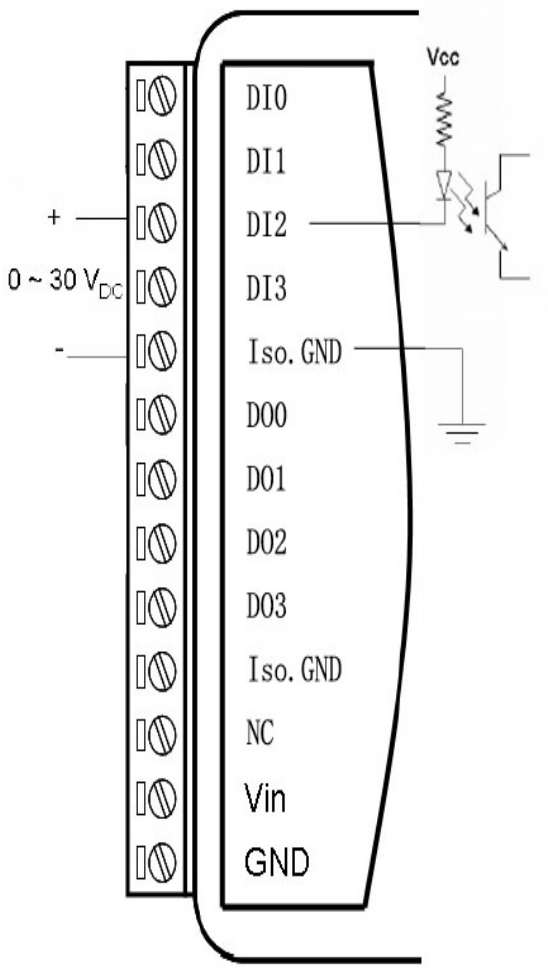

Figure1.4 Digital Input Wiring Instruction

1.4.4 Digital Output Wiring Instruction

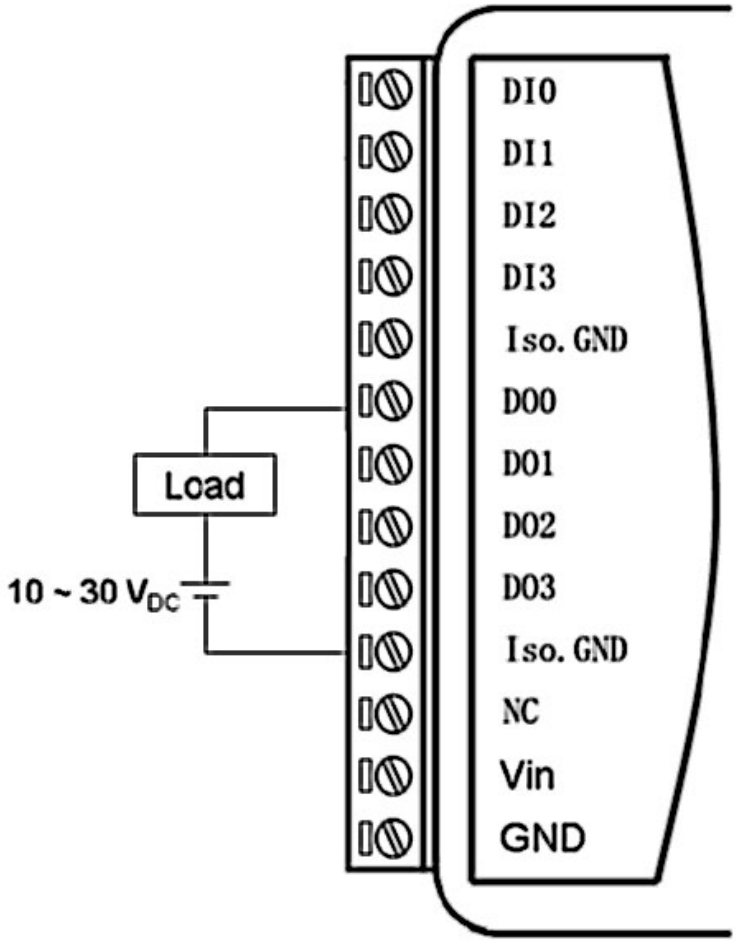

Figure1.5 Digital Output Wiring Instruction

1.5 Setting Table

Analog Input Type Setting (TT)

Table1-1

Type Code	30H	31H	32H
Min Output	0mA	4mA	0V
Max Output	20mA	20mA	10V

Chapter 2 Command Data Format

RemoDAQ-8300 systems accept a command/response form from the host computer. When systems are not transmitting or they are in listen mode. The host computer issues a command to the system with a specified address and waits a certain amount of time for the system to respond. If no response arrives, a time-out aborts the sequence and returns control to the host. This chapter explains the structure of the commands with Modbus/TCP protocol.

2.1 Command Structure

It is important to understand the encapsulation of a Modbus request or response carried on the Modbus/TCP network. A complete command consist of command head and command body. The command head is prefixed by six bytes and responds to pack Modbus format; the command body defines target device and requested action. Following example will help you to realize this structure quickly.

Example:

If you want to read the first two values of RemoDAQ-8324 (address: 40001~40002), the request command should be:

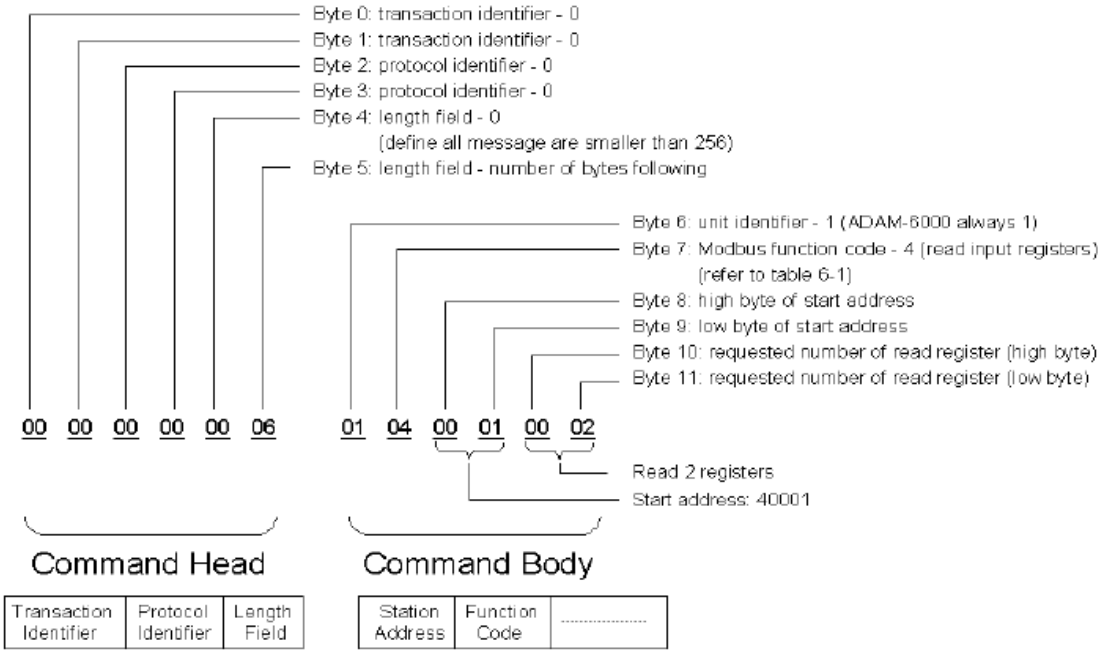

Figure2.1 Request Comment Structure

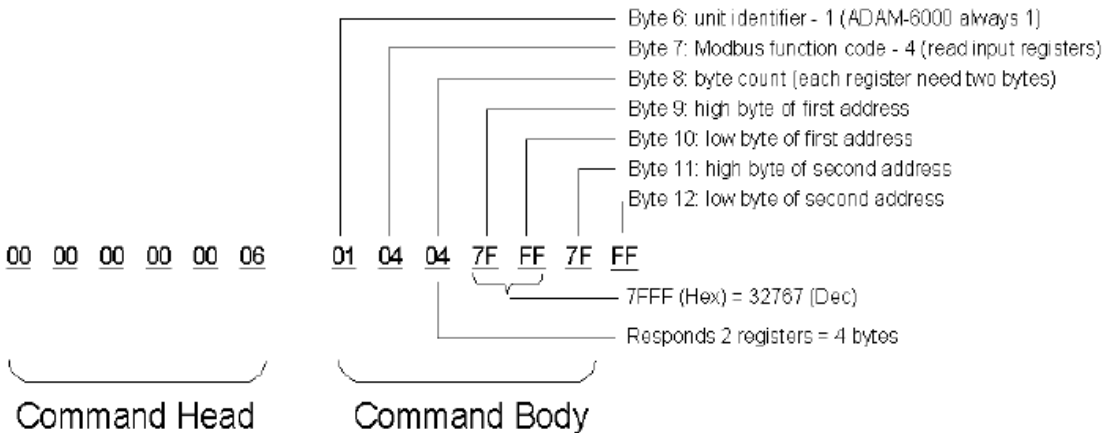

Figure2.2 Response Comment Structure

2.2 Modbus Function Code Introductions

To full-fill the programming requirement, there is a series of function code standards for user's reference…

Function Code 01

The function code 01 is used to read the discrete output's ON/OFF status of RemoDAQ-8300 modules in a binary data format.

Request message format for function code 01:

Command Body					
Station Address	Function Code	Start Address High Byte	Start address Low Byte	Requested Number of Coil High Byte	Requested Number of Coil Low Byte

Example: Read coil number 1 to 8 (address number 00017 to 00024) from RemoDAQ-8300 Modules

01 01 00 10 00 08

Response message format for function code 01:

Command Body					
Station Address	Function Code	Byte Count	Data	Data	…

Example: Coils number 2 and 7 are on, all others are off.

01 01 01 42

In the response the status of coils 1 to 8 is shown as the byte value 42 hex, equal to 0100 0010 binary.

Function Code 02

The function code 02 is used to read the discrete input's ON/OFF status of RemoDAQ-8300 in a binary data format.

Request message format for function code 02:

Command Body					
Station Address	Function Code	Start Address High Byte	Start address Low Byte	Requested Number of Coil High Byte	Requested Number of Coil Low Byte

Example: Read coil number 1 to 8 (address number 00001 to 00008) from RemoDAQ-8300 modules

01 01 00 01 00 08

Response message format for function code 01:

Command Body					
Station Address	Function Code	Byte Count	Data	Data	…

Example: input number 2 and 3 are on, all others are off.

01 01 01 60

In the response the status of input 1 to 8 is shown as the byte value 60 hex, equal to 0110 0000 binary.

Function Code 03/04

The function code 03 or 04 is used to read the binary contents of input registers.

Request message format for function code 03 or 04:

Command Body					
Station Address	Function Code	Start Address High Byte	Start address Low Byte	Requested Number of Register High Byte	Requested Number of Register Low Byte

Example: Read register 40002 to 40003 hex in RemoDAQ-8300 module

01 04 00 01 00 02

Response message format for function code 03 or 04:

Command Body					
Station Address	Function Code	Byte Count	Data	Data	…

Example: Values where register 40002= 0043H and register 40003= 21H
01 04 04 00 43 00 21

Function Code 05

Force a single coil to either ON or OFF. The requested ON/OFF state is specified by a constant in the query data field. A value of FF 00 hex requests it to be ON. A value of 00 00 hex requests it to be OFF. And a value of FF FF hex requests it to release the force.

Request message format for function code 05:

Command Body					
Station Address	Function Code	Coil Address High Byte	Coil address Low Byte	Force Data High Byte	Force Data Low Byte

Example: Force coil 3 (address 00003) ON in RemoDAQ-8300 module
01 05 00 03 FF 00

Response message format for function code 05:

The normal response is an echo of the query, returned after the coil state has been forced.

Command Body					
Station Address	Function Code	Coil Address High Byte	Coil address Low Byte	Force Data High Byte	Force Data Low Byte

Function Code 06

Preset integer value into a single register.

Request message format for function code 06:

Command Body					
Station Address	Function Code	Register Address High Byte	Register address Low Byte	Preset Data High Byte	Preset Data Low Byte

Example: Preset register 40002 to 00 04 hex in RemoDAQ-8300 module
01 06 00 02 00 04

Response message format for function code 06:

The normal response is an echo of the query, returned after the coil state has been preset.

Function Code 15 (0F hex)

Forces each coil in a sequence of coils to either ON or OFF.

Request message format for function code 15:

Command Body								
Station Address	Function Code	Start Address High Byte	Start Address Low Byte	Requested Number of Coil High Byte	Requested Number of Coil Low Byte	Byte Count	Force Data High Byte	Force Data Low Byte

Example: Request to force a series of 10 coils starting at address 00017 (11 hex) in RemoDAQ-8300 module.

01 0F 00 11 00 0A 02 CD 01

The query data contents are two bytes: CD 01 hex, equal to 1100 1101 0000 0001 binary. The binary bits are mapped to the addresses in the following way.

Bit: 1 1 0 0 1 1 0 1 0 0 0 0 0 0 0 1

Address (000XX): 24 23 22 21 20 19 18 17 - - - - - - 26 25

Response message format for function code 15:

The normal responses return the station address, function code, start address, and requested number of coil forced.

Command Body					
Station Address	Function Code	Start Address High Byte	Start Address Low Byte	Requested Number of Coil High Byte	Requested Number of Coil Low Byte

Example: 01 0F 00 11 00 0A

Function Code 16 (10 hex)

Preset values into a sequence of holding registers.

Request message format for function code 16:

Command Body							
Station Address	Function Code	Start Address High Byte	Start Address Low Byte	Requested Number of Register High Byte	Requested Number of Register Low Byte	Byte Count	Data

Example: Preset Address 40001 to 1234H and address 40002 to 5678H in RemoDAQ-8300 module.

01 10 00 00 00 02 04 12 34 56 78

Response message format for function code 08:

The normal responses return the station address, the function code, start address, and requested number of registers preset.

Command Body					
Station Address	Function Code	Start Address High Byte	Start Address Low Byte	Requested Number of Register High Byte	Requested Number of Register Low Byte

Example: 01 10 00 00 00 02

2.3 **RemoDAQ-8324 MODBUS RTU** Address Image Table

Table2-1

Address 4X(Decimal)	Hex	Channel Number	Content	Attribute	Description
40001	0H	0	current value	read/write	data=current (or voltage value)×1000,then convert to Hex
40002	1H	1	current value	read/write	
40003	2H	2	current value	read/write	
40004	3H	3	current value	read/write	
40201	C8H		Signal type	read/write	
40211	D2H		Name	read	83H，24H
40213	D4H		Version 1	read/write	A1H，00H
40225	E0H	0	safe value	read/write	
40226	E1H	1	safe value	read/write	
40227	E2H	2	safe value	read/write	
40228	E3H	3	safe value	read/write	
40229	E4H	0	power-on value	read/write	
40230	E5H	1	power-on value	read/write	

40231	E6H	2	power-on value	read/write	
40232	E7H	3	power-on value	read/write	
40235	EAH		Host computer watchdog	read/write	SSH①，VVH②
Address 0X(Decimal)	Hex	Channel Number	Content	Attribute	Description
0001	00H	0	current value	read	DI0
0002	01H	1	current value	read	DI1
0003	02H	2	current value	read	DI2
0004	03H	3	current value	read	DI3
0017	10H	0	current value	read/write	DO0
0018	11H	1	current value	read/write	DO1
0019	12H	2	current value	read/write	DO2
0020	13H	3	current value	read/write	DO3

Note：

①Module Status（see：Chapter 4 Application Annotation）

SS Module Status，Status will store at EEPROM。

7	6	5	4	3	2	1	0
*1	Reserve				*2	Reserve	

*1：Main watchdog： 0=close 1=open

*2：Main watchdog overflow mark（read only）： 0=clear 1=configure

Only when read the address EAH of “host computer watchdog”，main watchdog overflow mark will be clear as zero, any value user write in this byte will be ignored.

②Watchdog overflow time （see：Chapter 4 Application Annotation）

VV will show the time in the form of Hex，one number represents 0.1 second,

01 = 0.1s，FF = 25.5s

Chapter 3 Software Instruction

1、Click RemoDAQ-8300 Series Ethernet IO Module Utility.exe installation software.

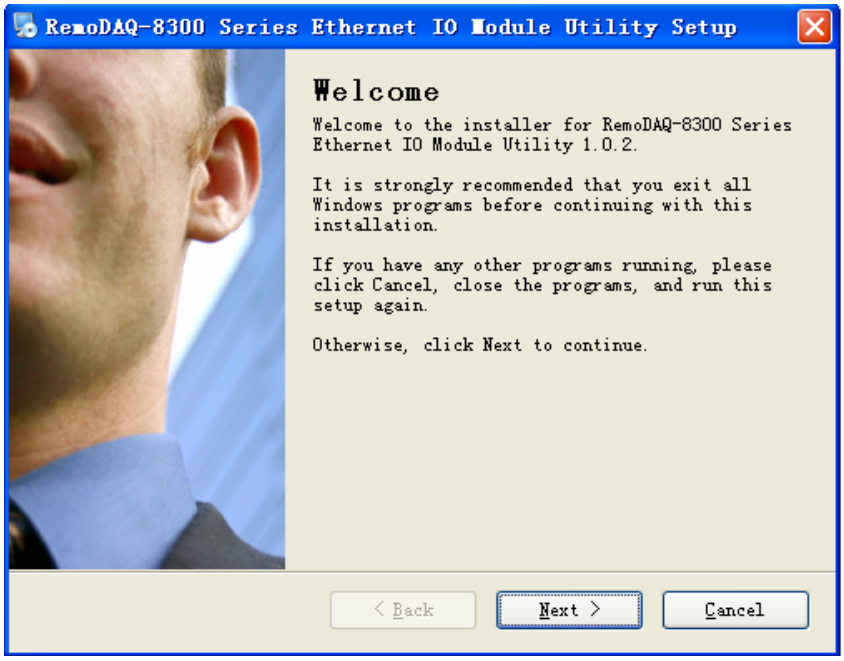

Figure3.1

2, Click “Next”，install according to the instruction

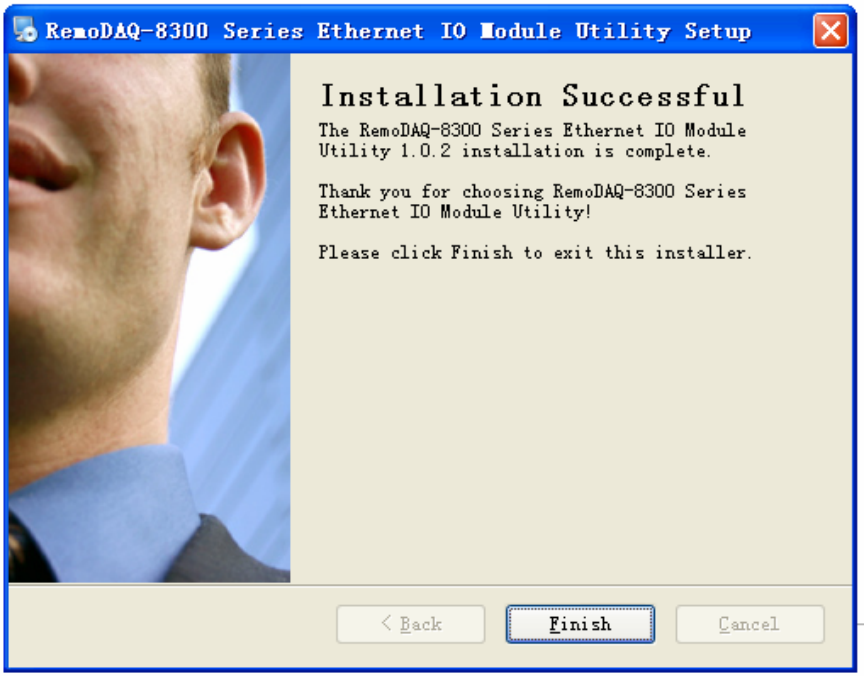

Figure3.2

3、Click “Finish”. The installation is completed.

4、There will be one shortcut icon on the desktop.

Figure3.3

5、Double click the shortcut icon into the interface so that you should be able to see the operation window as Figure 3.4.

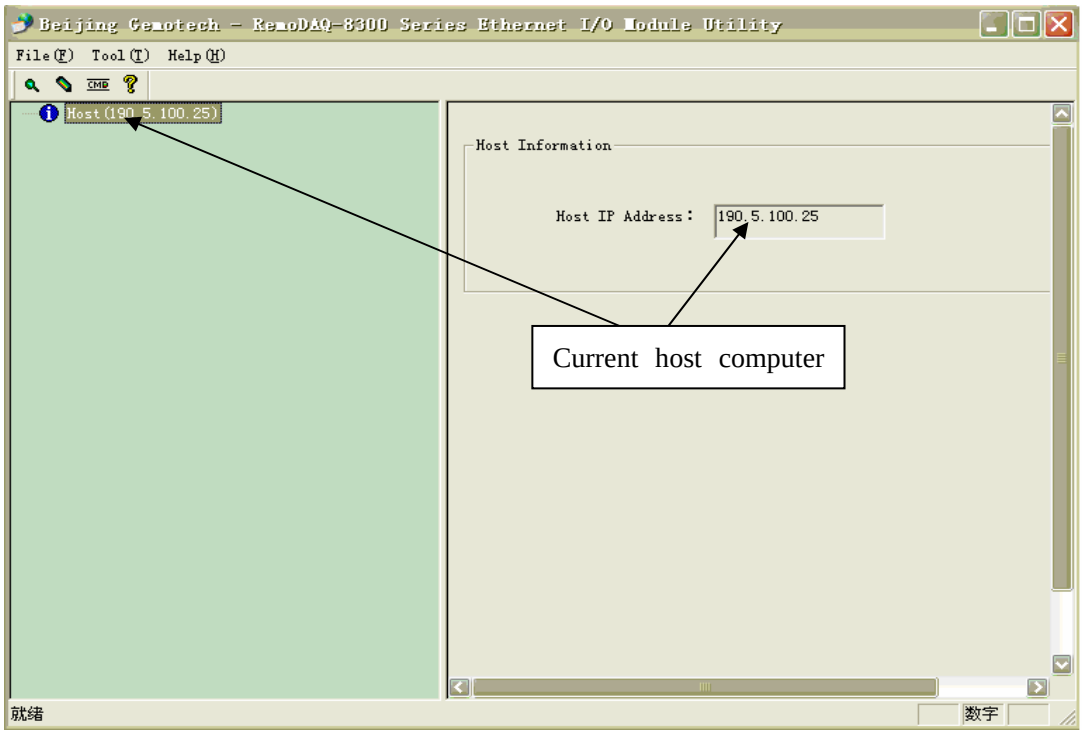

Figure3.4

6、Click the magnifying glass icon, RemoDAQ-8300 Series Ethernet IO Module Utility will then search all RemoDAQ-8300 modules on the Ethernet network. If your RemoDAQ-8300 modules are used for the first time, its IP will be 192.168.0.1 by default.

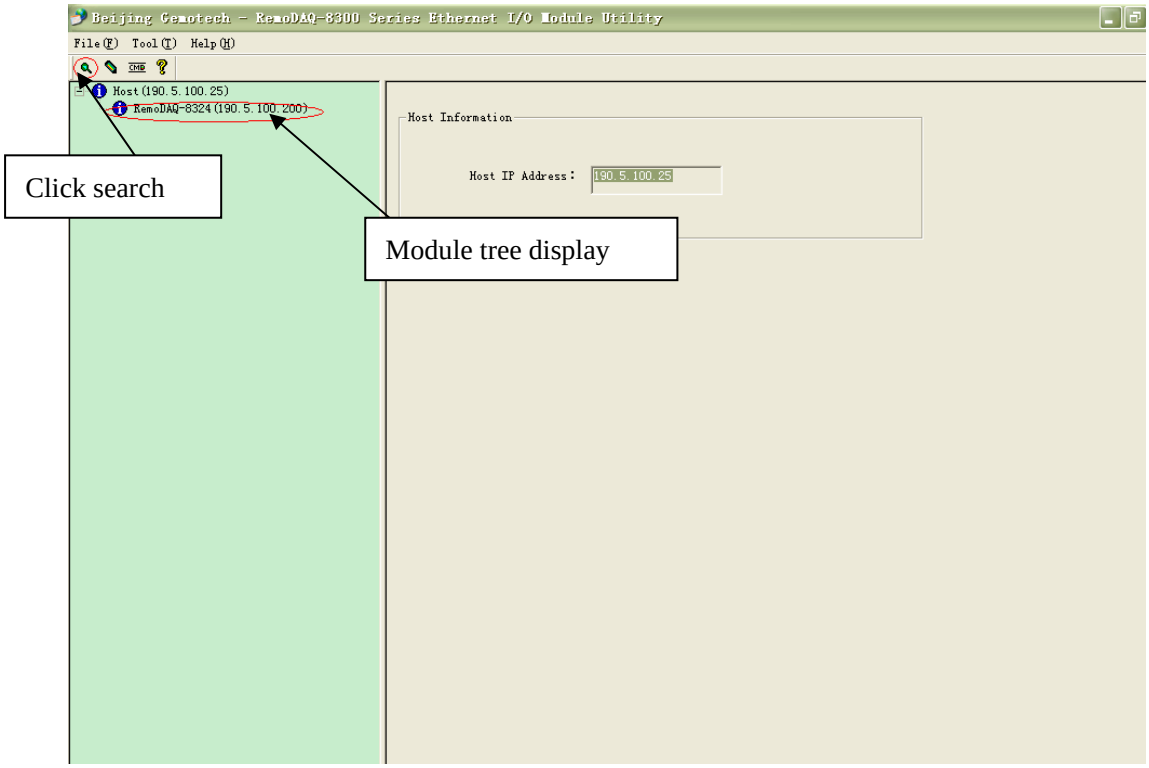

Figure3.5

7、Click RemoDAQ-8324，enter Network Setting

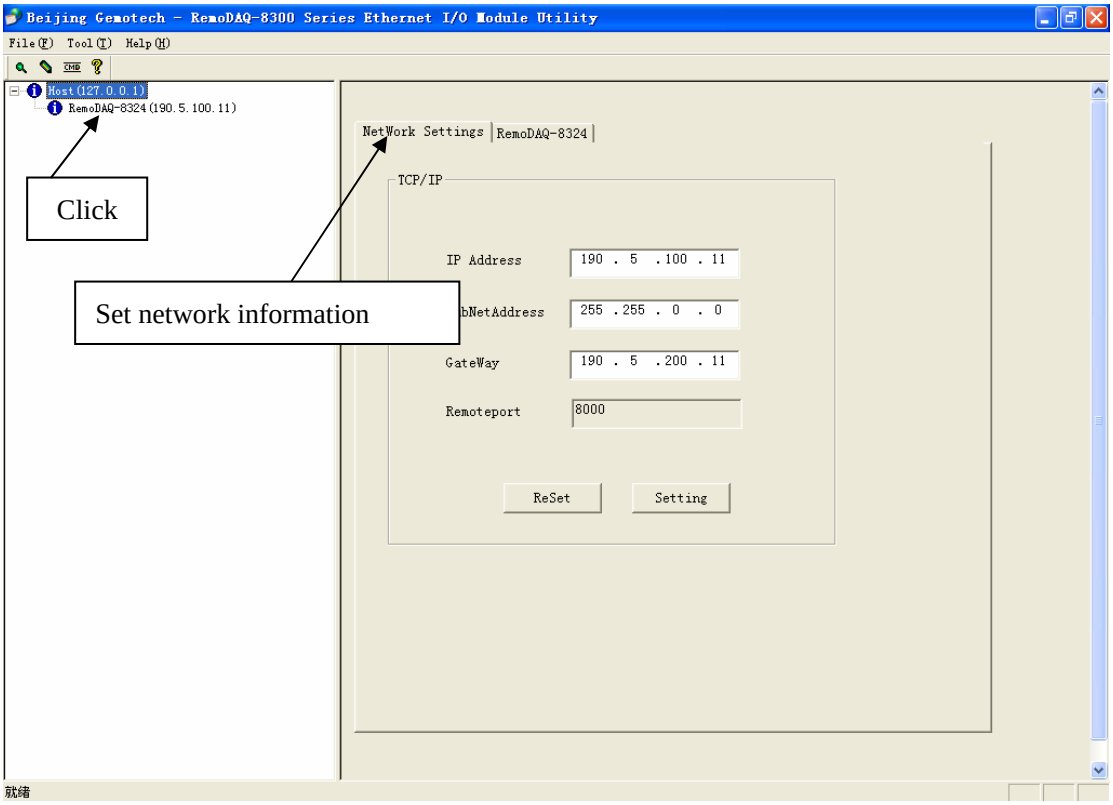

Figure3.6

8、You need to change IP of the RemoDAQ-8300 modules the same subnet with the host PC. Type the correct **IP address**, **Subnet address**, and **Gateway** on the Status Display area. After complete setting, click the **Setting** button. When you finish the Network Settings, please click the **ReStart** Button to restart the module. After that, you must search for the module again. The port of RemoDAQ-8300 modules are 8000.

9、 Click RemoDAQ-8324 into the application interface.

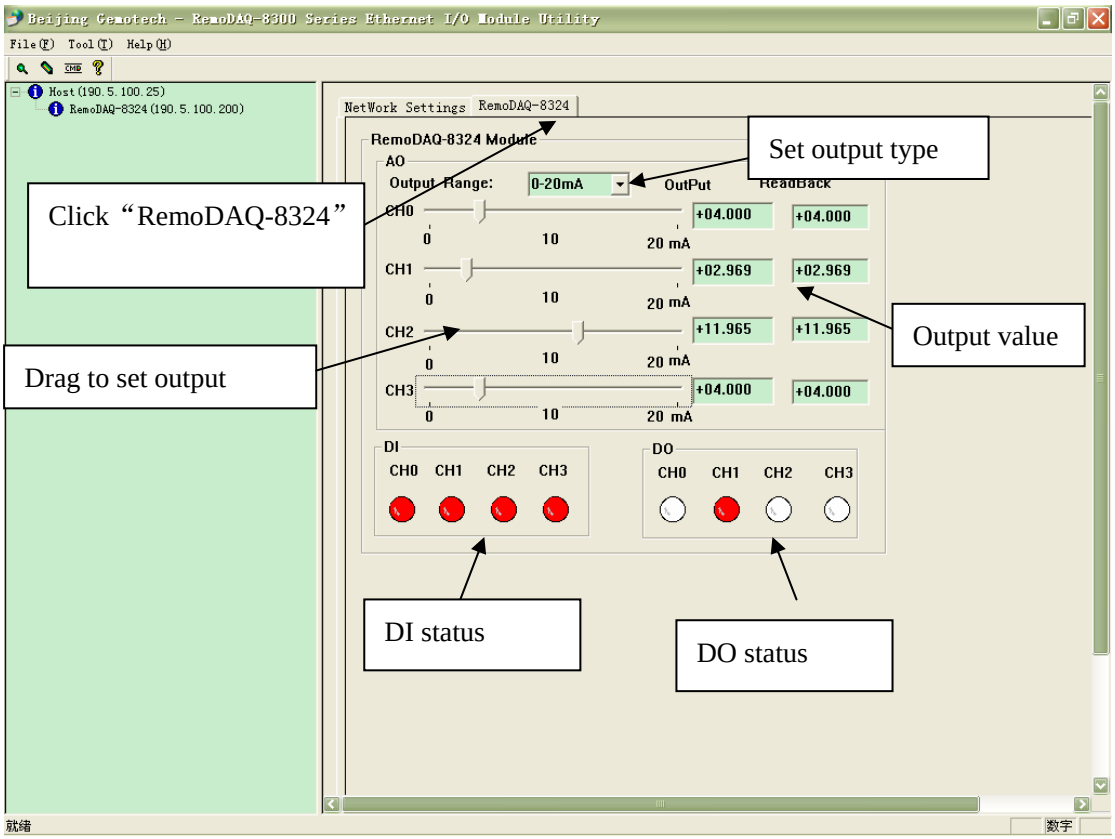

Figure3.7

You can read the value of analog output or configure setting for all channels on the **RemoDAQ-8324** area. In the **AO** area, select the range in the **Output Range** combo box. You can see and set the value of digital output in the **DO** area.You also can see the value of digital input in the **DI** area.

Chapter 4 Application Annotation

4.1Module Status

Power on again will make the current output value become power-on value，and the output value of module could be set directly through host computer command. When the main watchdog is in the status of overtime overflow, the current value of the module will become as safe value, and overflow mark will be setting, user must read “host computer watchdog” register through commands（modbus address is EAH）. When cleared watchdog overflow mark, the module will become the normal operating status.

4.2 watchdog operation

Dual watchdog = module watchdog + main watchdog
Module watchdog refers to built-in hardware reset circuit in module, this hardware circuit could reset in time and guarantee the module will never DeadHalt，when disturbed in the harsh environment. This could enhance the reliability.

The main watchdog refers to built-in real software watchdog; it could avoid DeadHalt or network faults. When the main watchdog overflows, module has set output as “safe value”，this could avoid that the accidents occurs。

4.3 Analog Output

Module output has 3 different terms：

1．safe value

If the main watchdog is in the status of overtime overflow, the module will be setting, analog output will be set as safe value automatically, that is output command could not change the output value. The overflow status of main watchdog will stored at EEPROM, only clear this status through command of reading “host computer watchdog” register. If users want to change output value, firstly must clear the main watchdog overflow time, and then send the output command to change the value.

2．power-on value

The module output will be set as power-on value, only in the status of power on again.

3．Output command value

If the overflow time of main watchdog is cleared, Users send command to write 00H－03H to change the module output value, then the module will return successfully. If the output value users set surpass the module’s max output value, the actual output value will be the module’s max value. If the output value users set is less than min value of module, actual output value will become the min value of the module.

4.4 Current Output Value Readback.

RemoDAQ-8324 has no AD convertor to monitor the current output signals, but DAQ-8324 could respond to the current output value which is sent to DAC. It could not reflect the true value of DAC in real, and not detect the abnormal error of wiring and overload.