V1.0 2009.05.19

RemoDAQ-8318 Module User's Manual

Beijing Gemotech Intelligent Technology Co.，Ltd

Content

Chapter1. Product Introduction 2
1.1General Introduction 2
1.2 Pin Assignment 3
1.3 Features 3
1.4 Wiring Instruction 4
1.5 Setting Table 5
Chapter2 Command Data Formats 7
2.1 Command Structure 7
2.2 Modbus Function Code Introductions 8
2.3 RemoDAQ-8318 MODBUS RTU Address Image Table 12
Chapter3 Software Instruction 14

Chapter1. Product Introduction

1.1General Introduction

RemoDAQ-8300 Ethernet-based data acquisition and control modules provide I/O, data acquisitions, and networking in one module to build a cost effective, distributed monitoring and control solution for a wide variety of applications. Through standard Ethernet networking, RemoDAQ-8300 retrieves I/O values from sensors, and can publish them as a real-time I/O values to networking nodes via LAN, Intranet, or Internet. With Ethernet-enabled technology, RemoDAQ-8300 series modules build up a cost-effective DA&C system for Building Automation, Environmental Monitoring, and Facility Management and Manufacturing applications.

RemoDAQ-8318 is the 8-channel Analog/ Thermocouple input module based on Ethernet.

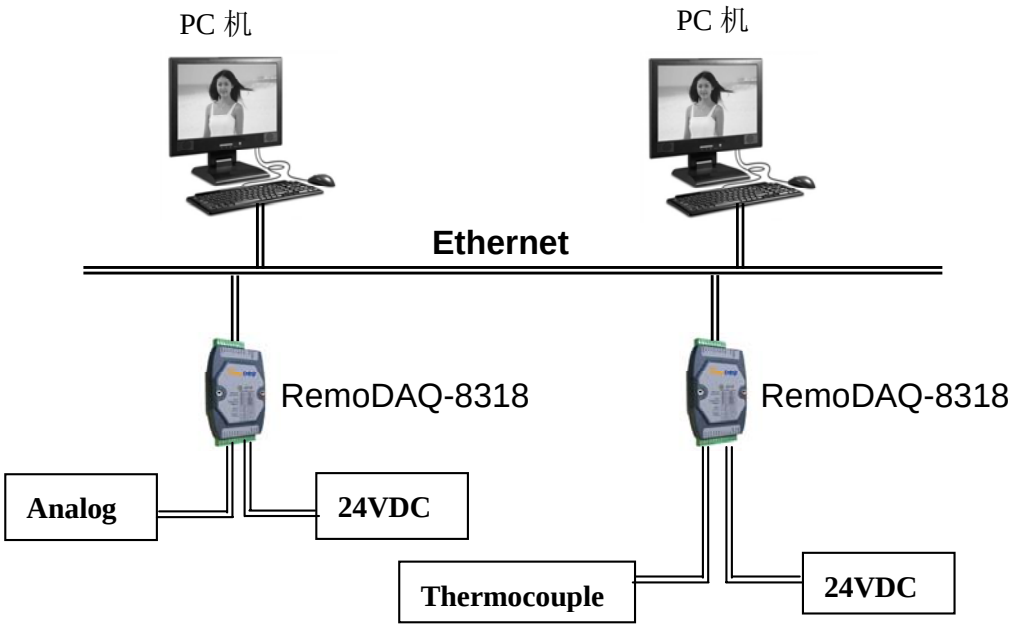

Figure1.1

1.2 Pin Assignment

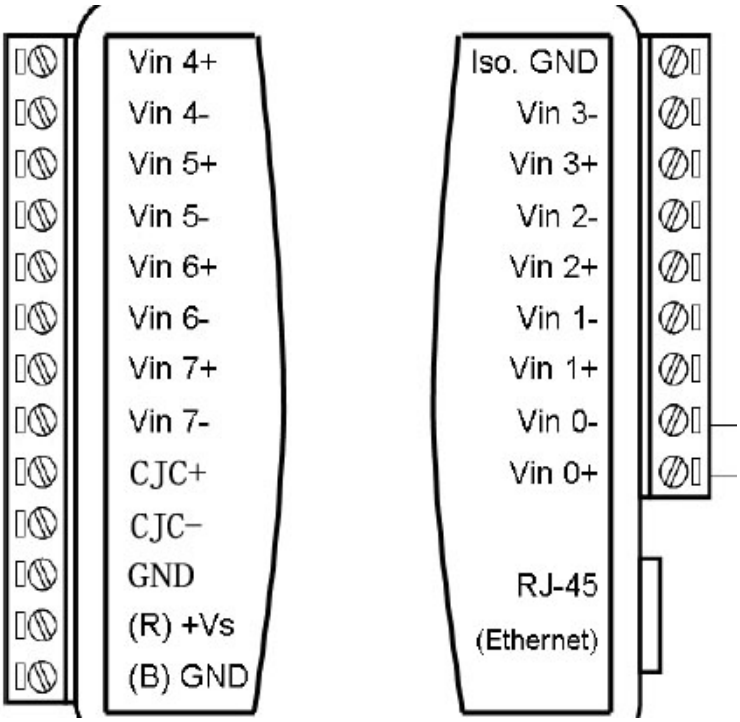

Figure 1.2

1.3 Features

Support 10/100M Ethernet
Support Modbus/TCP
Input voltage：+10V~+30VDC
Power consumption：1.8W
Temperature：-20℃~70℃
Humidity：5%~90%，no condensing
Analog input
Channels：8
Input type：mV，V，mA
Thermocouple type：J，K，T，E，R，S，B，N，C
Sampling rate：10 Hz
Accuracy: 1%
Zero drift：20uV/℃
Full range drift：25ppm/℃
Input impedance：7M Ohms
Over-voltage protection：±30V
Isolation：3000VDC

1.4 Wiring Instruction

RemoDAQ-8318 temperature sensor wiring instruction

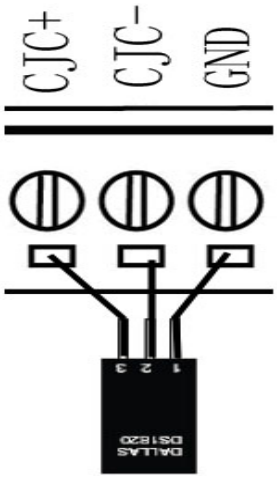

Figure 1.3

Analog Input（0～7 channels）wiring instruction

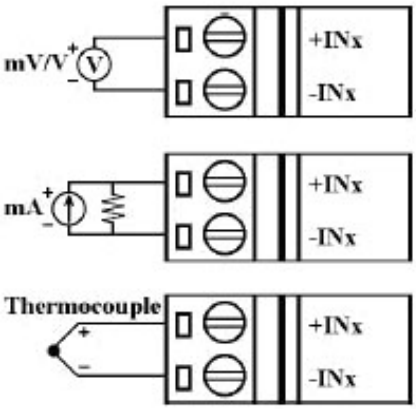

Figure 1.4

1.5 Setting Table

Analog input type setting (TT)

Table 1-1

Type Code	00	01	02	03	04	05	06
Min output	-15mV	-50mV	-100mV	-500mV	-1V	-2.5V	-20mA
Max output	+15mV	+50mV	+100mV	+500mV	+1V	+2.5V	+20mA

Type Code	0E	0F	10	11	12	13	14	15	16	17	18
T.C.Type	J	K	T	E	R	S	B	N	WRe	L	M
Min temperature（℃）	-200	-250	-250	-250	0	0	0	-250	0	-200	-200
Max temperature（℃）	1100	1400	400	900	1750	1750	1800	1300	2310	800	100

Thermocouple input type and data format table

Table 1-2

Type Code	Input range	Data format	-F.S	+F.S.
0E	J type -200~1100	Engineering unit	-200.00	+1100.00
		HEX	0000	FFFF
0F	K type -250~1400	Engineering unit	-0250.0	+1400.0
		HEX	0000	FFFF
10	T type -250~400	Engineering unit	-0250.0	+400.00
		HEX	0000	FFFF
11	E type -250~900	Engineering unit	-0250.0	+900.0
		HEX	0000	FFFF
12	R type 0~1750	Engineering unit	+0000.0	+1750.0
		HEX	0000	FFFF
13	S type 0~1750	Engineering unit	+0000.0	+1750.0
		HEX	0000	FFFF
14	B type 0~1800	Engineering unit	+0000.0	+1800.0
		HEX	0000	FFFF
15	N type -250~1300	Engineering unit	-0250.0	+1300.0
		HEX	0000	FFFF

16	WRe5/26 type 0~2310	Engineering unit	+00.000	+2310.0
		HEX	0000	FFFF
17	L type -200~800	Engineering unit	-200.00	+800.00
		HEX (complement)	0000	FFFF
18	M type -200~100	Engineering unit	-200.00	+100.00
		HEX (complement)	0000	FFFF

Chapter2 Command Data Formats

RemoDAQ-8300 systems accept a command/response form from the host computer. When systems are not transmitting or they are in listen mode. The host computer issues a command to the system with a specified address and waits a certain amount of time for the system to respond. If no response arrives, a time-out aborts the sequence and returns control to the host. This chapter explains the structure of the commands with Modbus/TCP protocol.

2.1 Command Structure

It is important to understand the encapsulation of a Modbus request or response carried on the Modbus/TCP network. A complete command consists of command head and command body. The command head is prefixed by six bytes and responds to pack Modbus format; the command body defines target device and requested action. Following example will help you to realize this structure quickly.

Example:

If you want to read the first two values of RemoDAQ-8318 (address: 40001~40002), the request command should be:

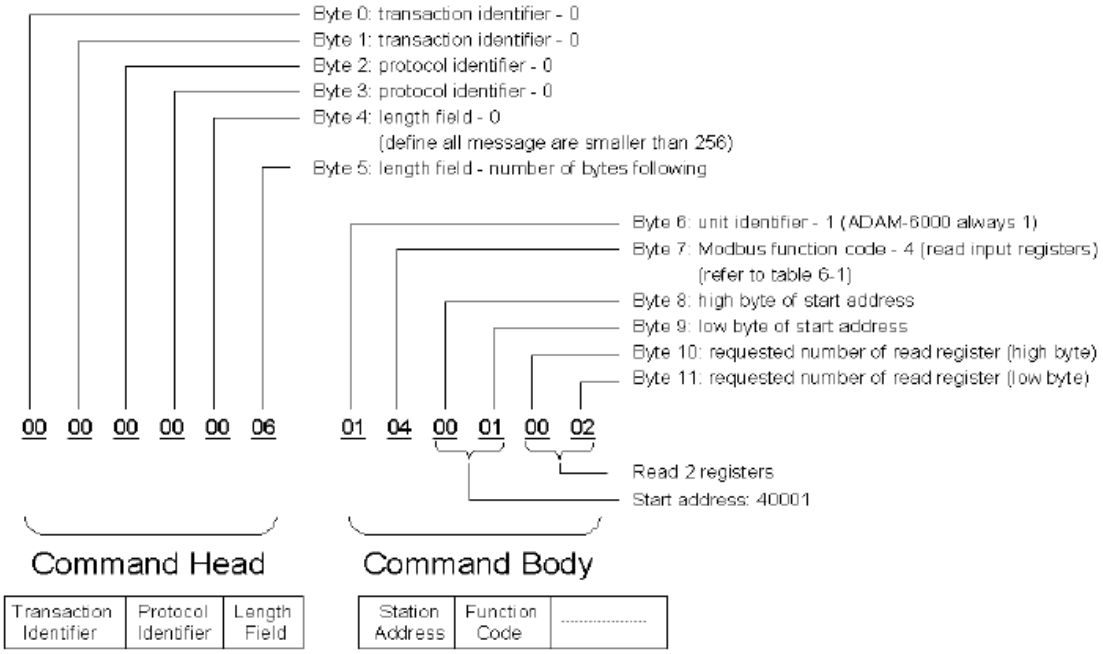

Figure2.1 Request Comment Structure

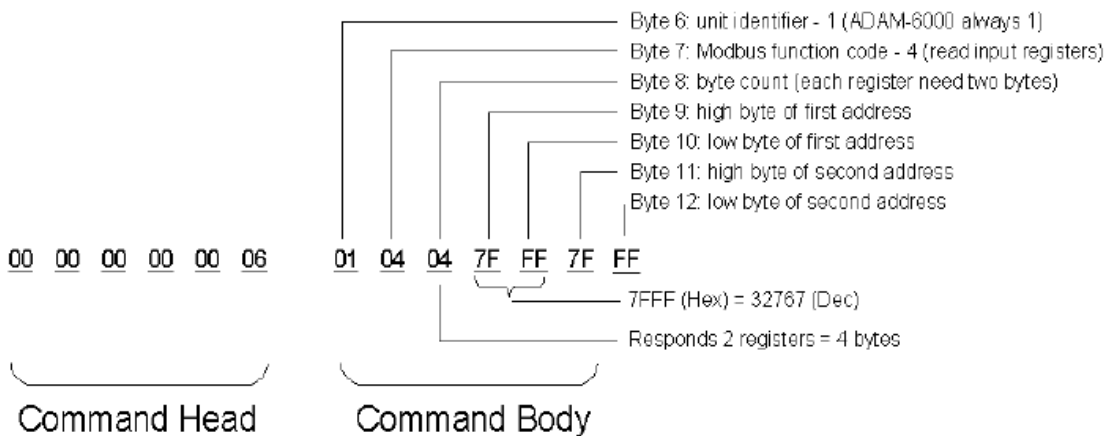

Figure2.2 Response Comment Structure

2.2 Modbus Function Code Introductions

To full-fill the programming requirement, there is a series of function code standards for user's reference…

Function Code 01

The function code 01 is used to read the discrete output's ON/OFF status of RemoDAQ-8300 modules in a binary data format.

Request message format for function code 01:

Command Body					
Station Address	Function Code	Start Address High Byte	Start address Low Byte	Requested Number of Coil High Byte	Requested Number of Coil Low Byte

Example: Read coil number 1 to 8 (address number 00017 to 00024) from RemoDAQ-8300 Modules

01 01 00 10 00 08

Response message format for function code 01:

Command Body					
Station Address	Function Code	Byte Count	Data	Data	…

Example: Coils number 2 and 7 are on, all others are off.

01 01 01 42

In the response the status of coils 1 to 8 is shown as the byte value 42 hex, equal to 0100 0010 binary.

Function Code 02

The function code 02 is used to read the discrete input's ON/OFF status of RemoDAQ-8300 in a binary data format.

Request message format for function code 02:

Command Body					
Station Address	Function Code	Start Address High Byte	Start address Low Byte	Requested Number of Coil High Byte	Requested Number of Coil Low Byte

Example: Read coil number 1 to 8 (address number 00001 to 00008) from RemoDAQ-8300 modules

01 01 00 01 00 08

Response message format for function code 01:

Command Body					
Station Address	Function Code	Byte Count	Data	Data	…

Example: input number 2 and 3 are on, all others are off.

01 01 01 60

In the response the status of input 1 to 8 is shown as the byte value 60 hex, equal to 0110 0000 binary.

Function Code 03/04

The function code 03 or 04 is used to read the binary contents of input registers.

Request message format for function code 03 or 04:

Command Body					
Station Address	Function Code	Start Address High Byte	Start address Low Byte	Requested Number of Register High Byte	Requested Number of Register Low Byte

Example: Read register 40002 to 40003 hex in RemoDAQ-8300 module

01 04 00 01 00 02

Response message format for function code 03 or 04:

Command Body					
Station Address	Function Code	Byte Count	Data	Data	…

Example: Values where register 40002= 0043H and register 40003= 21H
01 04 04 00 43 00 21

Function Code 05

Force a single coil to either ON or OFF. The requested ON/OFF state is specified by a constant in the query data field. A value of FF 00 hex requests it to be ON. A value of 00 00 hex requests it to be OFF. And a value of FF FF hex requests it to release the force.

Request message format for function code 05:

Command Body					
Station Address	Function Code	Coil Address High Byte	Coil address Low Byte	Force Data High Byte	Force Data Low Byte

Example: Force coil 3 (address 00003) ON in RemoDAQ-8300 module
01 05 00 03 FF 00

Response message format for function code 05:

The normal response is an echo of the query, returned after the coil state has been forced.

Command Body					
Station Address	Function Code	Coil Address High Byte	Coil address Low Byte	Force Data High Byte	Force Data Low Byte

Function Code 06

Preset integer value into a single register.

Request message format for function code 06:

Command Body					
Station Address	Function Code	Register Address High Byte	Register address Low Byte	Preset Data High Byte	Preset Data Low Byte

Example: Preset register 40002 to 00 04 hex in RemoDAQ-8300 module
01 06 00 02 00 04

Response message format for function code 06:

The normal response is an echo of the query, returned after the coil state has been preset.

Response message format for function code 08:

The normal responses return the station address, the function code, start address, and requested number of registers preset.

Command Body					
Station Address	Function Code	Start Address High Byte	Start Address Low Byte	Requested Number of Register High Byte	Requested Number of Register Low Byte

Example: 01 10 00 00 00 02

2.3 RemoDAQ-8318 MODBUS RTU Address Image Table

Table 2-1

Address 4X(Decimal)	Hexadecimal	Channel number	Content	Property	Function Code	Notes
40001	0H	0	Current Value	Read	04	0000H~FFFFH Corresponding Engineering-scale range
40002	1H	1	Current Value	Read	04	
……	…..					
40008	7H	7	Current Value	Read	04	
40009	8H		CJC Temperature	Read	04	0000H~FFFFH Corresponding Engineering-scale range
40201	C8H		Signal	Read	04/06	

			Type	/Write		
40211	D2H		Name	Read	04	83H，18H
40213	D4H		Version 1	Read	04	A1H，00H
40216	D7H		CJC Offset	Read / Write	04/06	0000H~FFFFH
40221	DCH		Channel	Read /Write	04/06	00H，FFH

Notes：When set/read CJC temperature offset value, on 0.01℃/Unit，0000H～AFFFH is plus，B000H～FFFFH is minus.

Chapter3 Software Instruction

1、Click RemoDAQ-8300 Series Ethernet IO Module Utility.exe installation the tools.

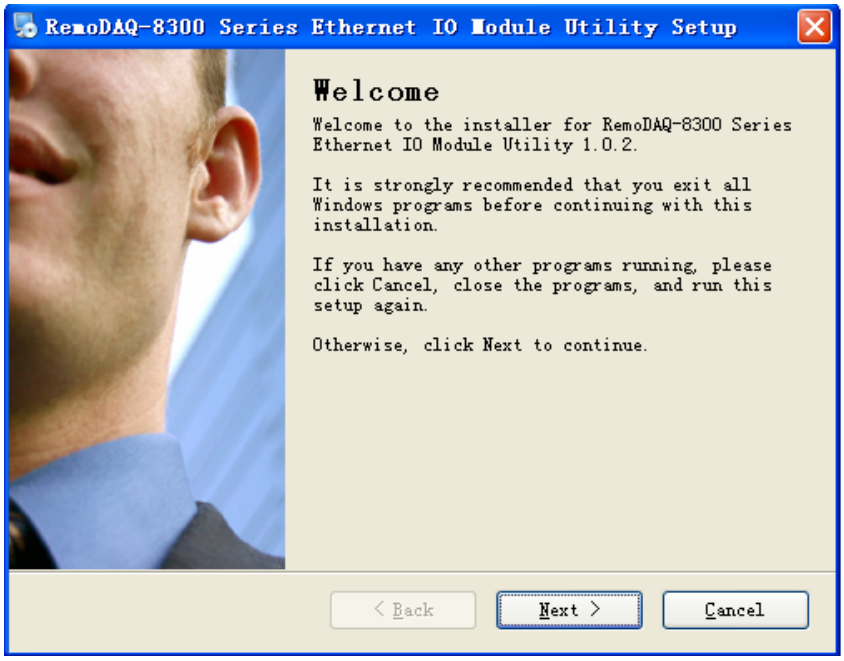

Figure 3.1

2、Click Next，install according to instruction.

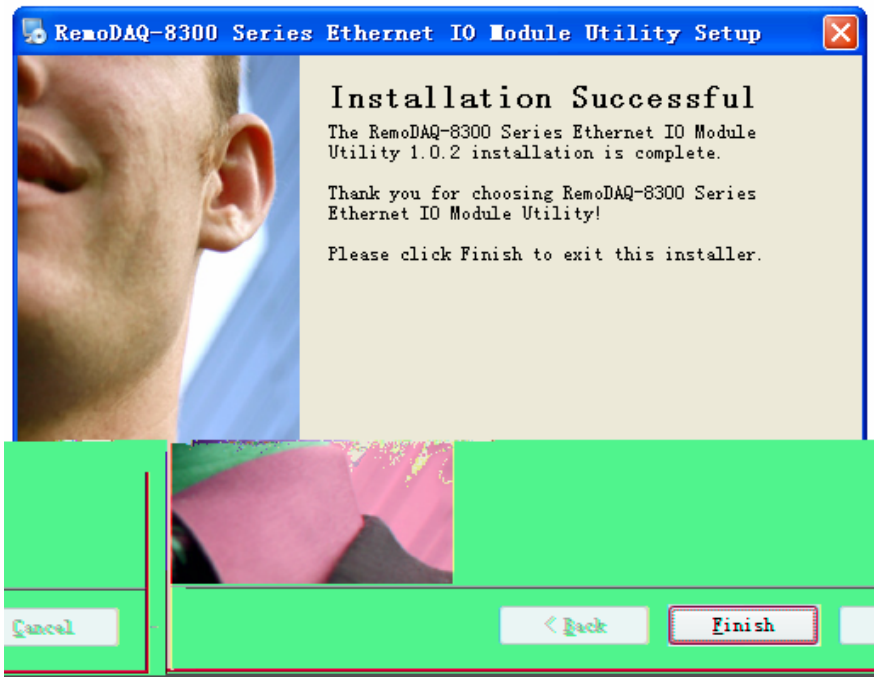

Figure 3.2

3、Click Finish. Installation ends.

4、General the shortcut icon on the desktop.

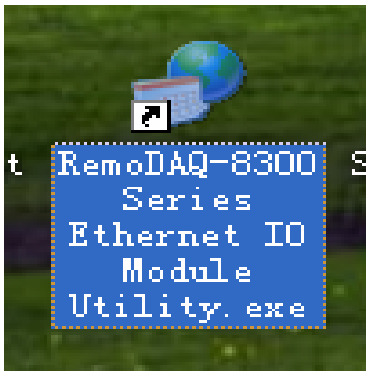

Figure 3.3

5、Click icon to enter interface.

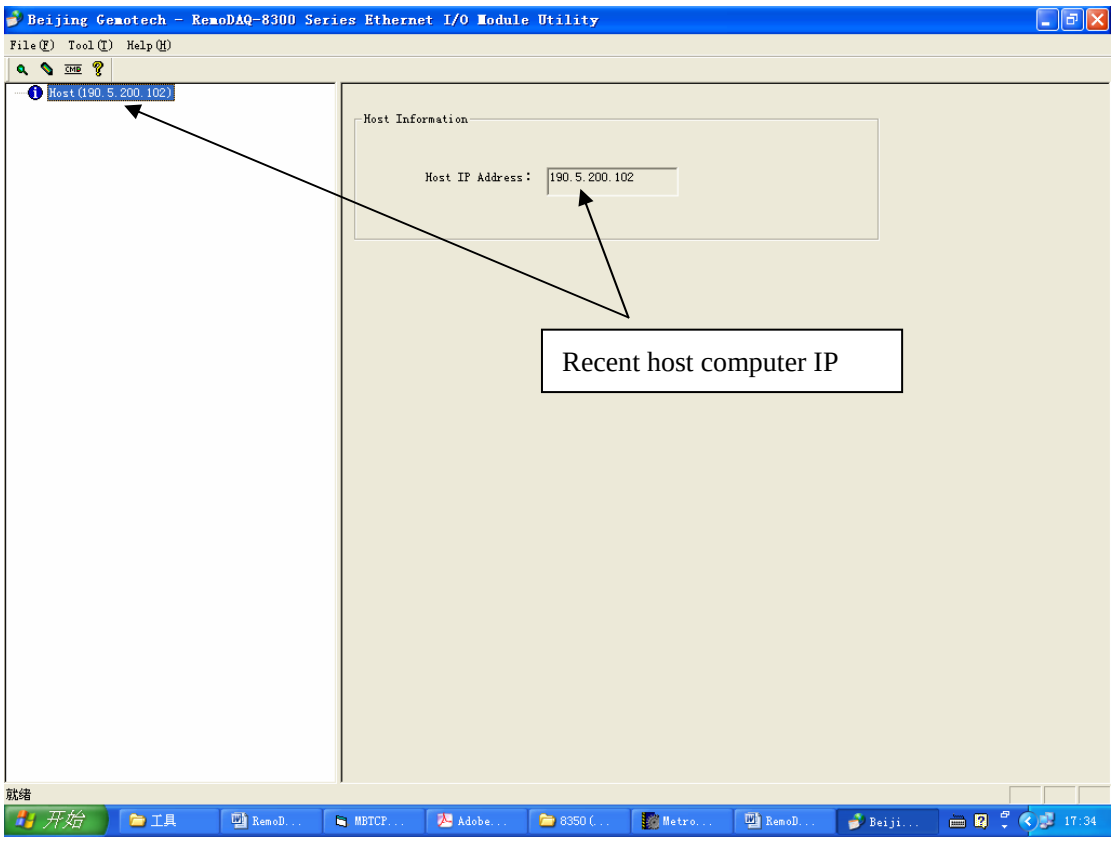

Figure 3.4

6、Click magnifying glass icon, search module. If your RemoDAQ-8300 modules are used for the first time, its IP will be 192.168.0.1 by default.

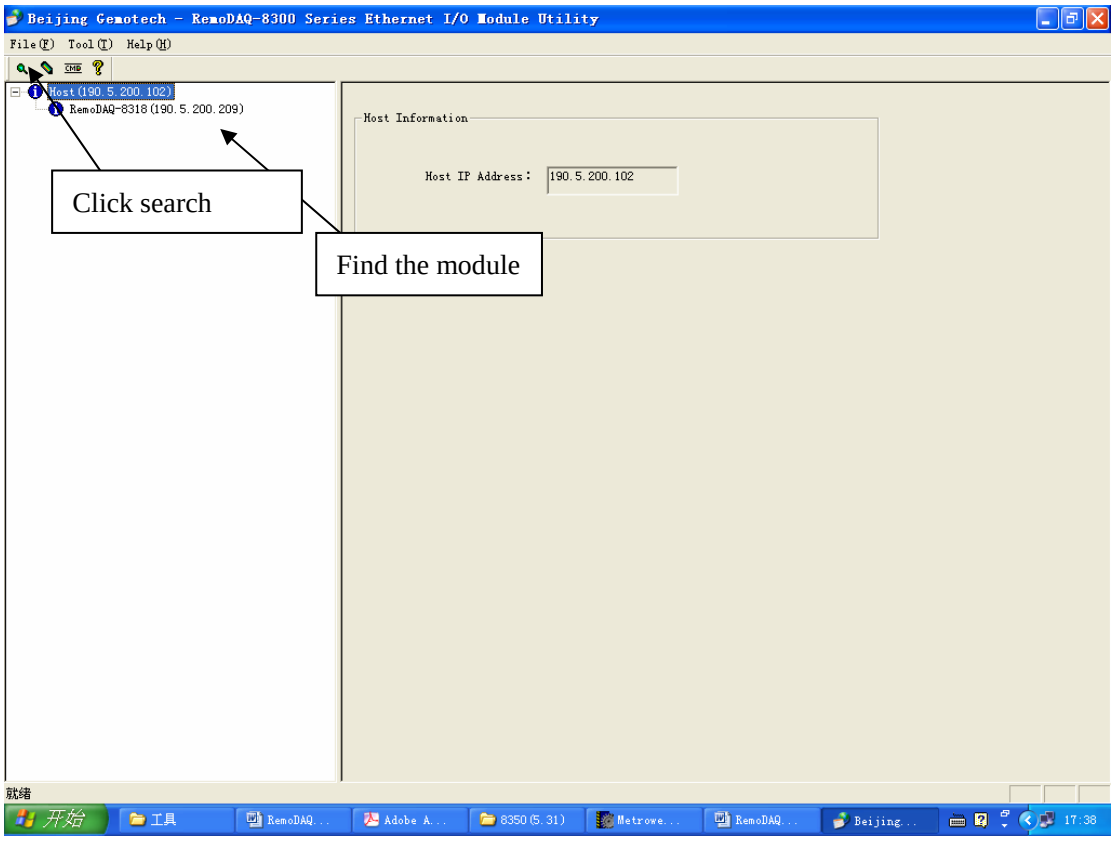

7、Click RemoDAQ-8318。

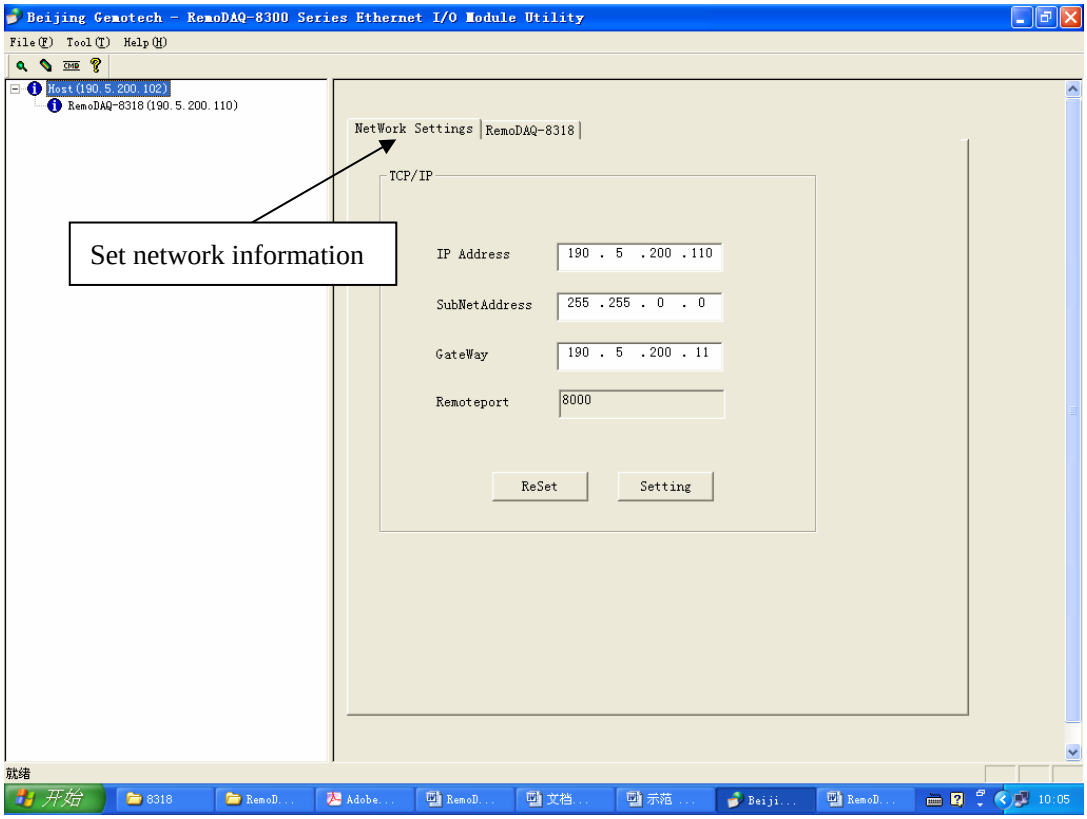

8、You need to change IP of the RemoDAQ-8300 modules the same subnet with the host PC. Type the correct IP address, Subnet address, and

Gateway on the Status Display area. After complete setting, click the Setting button. When you finish the Network Settings, please click the ReStart Button to restart the module. After that, you must search for the module again. The port of RemoDAQ-8300 modules are 8000.

9、Click RemoDAQ-8318 into the application interface。

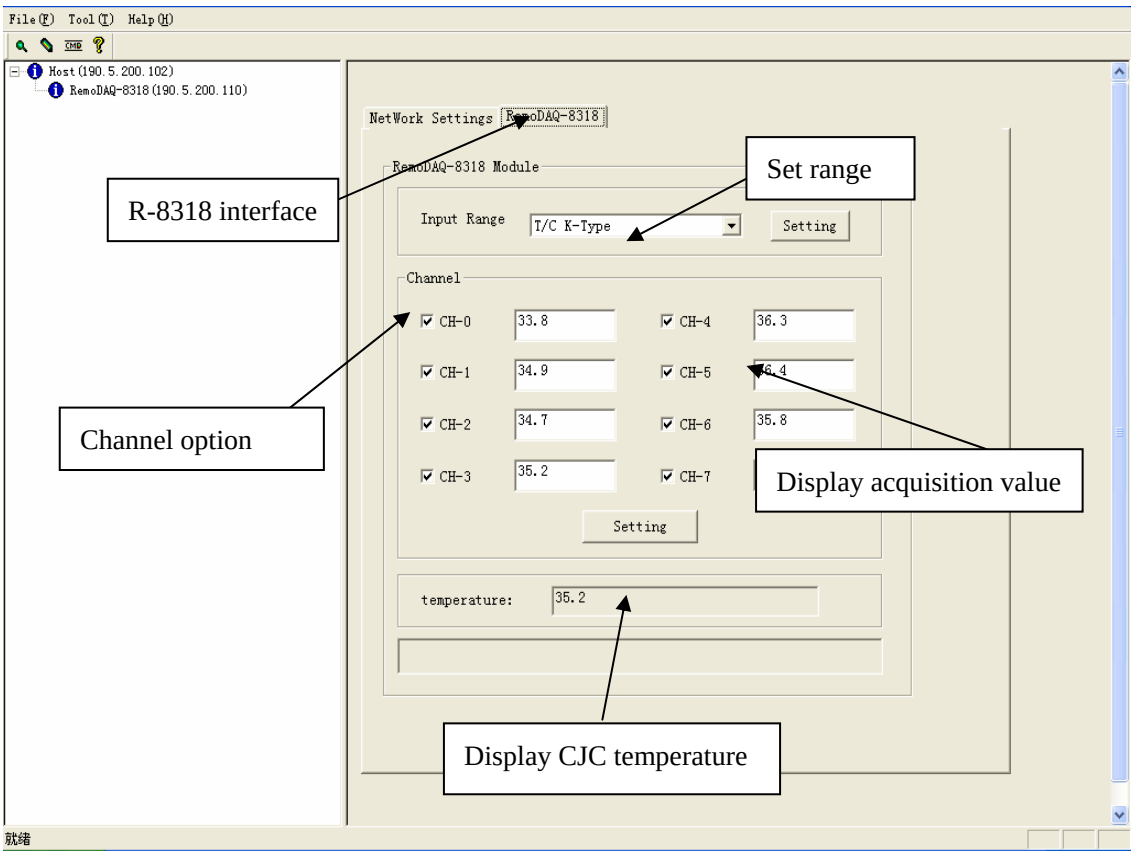

10、You can read analog input value or configure setting for all channels on the **RemoDAQ-8318** area. In the **Range** area, select the range in the **Input range** combo box. After selecting appropriate range, click the **Setting** button. In the **Channel** area, you can see the current value of analog input, simply choose the check box of the channels you want to monitor and click the **Setting** button.